Neuffener Strasse 29
D-72636 Frickenhausen
Tel: (+49) 7025 - 911 007
Fax: (+49) 7025 - 911 008
Email: info@h-c-s-gmbh.de
www.h-c-s-gmbh.de

HCS
HYDRAULIC CONTROL SYSTEMS

THE ART OF CONTROL

Universal On-Board and Stand-Alone
Digital Amplifier and Controller

ODC-22-01/03/04/06

VERSIONS FOR OPEN AND CLOSED LOOP APPLICATIONS

- **On-board or stand-alone digital amplifier and controller in IPx5/IPx9**
- **Wide ambient temperature range - 25° .... + 80° C (- 13° F ... 175° F)**
- **For one valve w/wo feedback and/or process value feedback**
- **Housing parts aluminium EN AW-6060 (AlMgSi, seawater resistent)**
- **Corrosion protection by surface treatment Alutin**
- **Adaptation possible to all kinds of valves**
- **M12 connectors as preferred standard. Other connectors, cable glands or flying leads on request**
- **Highly versatile and adaptable - all kinds of customization possible**
- **Full digital PI current controller and multifunctional controller for valve or process control systems**
- **Optional bus interface (CANopen)**
- **Analogue inputs with high resolution / accuracy**
- **Easy usage and operation by means of WINDOWS program HCSTool**
  NEW: Now including oscilloscope function!

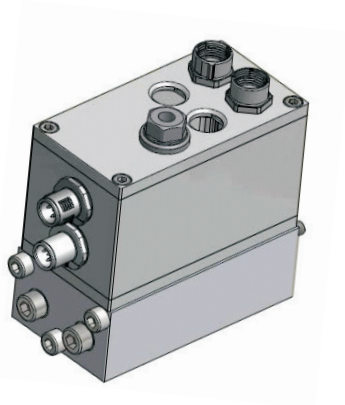

1 Applications and usage

General:
ODC is a digital control unit to be used with proportional solenoids, e.g. hydraulic valves with a current draw of up to 800 mA (or 2500 mA on request).
It can be controlled by a number of different comand signals - analogue and digital (BUS) - and has sensor inputs for valve and/or process feedback signals (closed loop aplications).
The unit has a modular design and can easily be adapted to a very wide range of interfaces and applications.
It is also prepared and adjusted for direct mounting (on-board) on Hawe PSL/PSV series and Servi HSV 600 series proport. valves.
ODC is fit for purpose for outdoor usage, including marine environments, and has a extreme robust design to withstand vibrations, temperature fluctuations and electronic noise (EMC).

ODC-2 amplifier and controller units are used for:
proportional valves with/without feedback as
- directional / direct and pilot operated
- flow control valves
- pressure reducing/regulating valves
- cartridge valves
- servo valves (on request)
- valves without feedback used in applications with process value feedback (e.g. position, pressure, velocity, rpm, etc.)

2 Features (electronic part)

- Fully digitized amplifier and controllerl
- Optional available with bus interfaces - CANopen
- Flexible and r CANopen em, use of a modern 16 bit CPU with high power reserve
- Flexibility due to possible software and hardware extensions and multiple options for customer specific requirements e.g. connector selection
- Flash-EPROM technology for easy software update or modifications from PC via USB interface
- Variable settings for all kinds of solenoid systems
- Change of selected parameters “on-the-fly” without interference of function; monitioring of display values and 4-channel oscilloscope with **HCSTool** via PC
- High resolution and accuracy for analogue signals due to 12-Bit A/D-converter
- All kinds of customer specific adaptations possible. Just ask us and we provide the right solution

3 Technical data (electronic part)

Feature	Range, characteristics
Supply voltage	12 V - 10 % ... 24 V + 20 %, residual ripple < 10 % (max. 50 VA power draw) Power consumption approx. 150 mA @ 24 V (solenoids deactivated)
Solenoid system selection	0.15 A; 0.24 A; 0.50 A; 0.63 A; 0.80 A (intermediate values adjustable; 2.5 A on request)
Control voltage for digital input	(12) 24 V +/- 10 %, residual ripple < 10 %, current draw < 20 mA
Temperature ranges *1	Ambient: - 25° to + 80° C (- 13° to 175° F); storage: - 40° to + 105° C (- 40° to 220° F)
EMC	In accordance with applicable standards (CE); Germanischer Lloyd VI-7-2 on request IEC 60533: 11/2010 EMC, Civil ship (General Zone) EN 61000-4-2, EN 61000-4-3, EN 61000-4-4, EN 61000-4-5, EN 61000-4-6, EN 61000-4-16 Surge: 55V 30ms Isolation between housing and connector terminals > 10 MΩ (50V DC)
Analogue inputs (set values and/or feedback values)	Analogue1, Analogue2, Analogue 3 (valve feedback); Differential voltage and current input applicable with 12 bit resolution 0 … +- 10 V, 5 V +- 5 V; 5 V +- 4,5 V, 0 … 20 mA, 4 … 20 mA; also poss.: 12 V +- 6 V Voltage input resistance 240 kΩ; current meas. shunt 205 Ω With or without cable fracture detection – selectable by parameter when applicable Timer input, can be used as PWM set value, pulse feedback
Digital input	1 digital input (Enable)
Solenoid current (output)	2 output stages, each for up to max. 1.0 A (with over-energ. and quick de-energization);
Digital output	1 output, voltage level 0 V / 24 V, 10 mA ($\overline{\text{ERROR}}$)
Reference output	1 Reference output 10 V (max. 20 mA), short circuit protected
Analogue output	1 Analogue output 0 … + - 10 V (max. 5 mA)
Supply output f. (external) sensor	24 V / 100 mA; overload protected (Mutifuse). Can also be used as error indication
Interface 1	USB 2.0 with USB micro connector
Interface 2 (Versions with Bus-Interf. only!) Option 1 = CANopen	CAN field bus interface provides a connection to the amplifier using standard CAN frames according to ISO 11898-1…3 and ISO 11898-5 (CiA 301; CiA 202-1; CiA 305; ISO 11898-1; ISO 11898-2; ISO 11898-3; ISO 11898-5); baudrate and CAN address defined by parameter. For details refer to document: „ODC CANopen Specification Rxx) Device Profile: VDMA Profile Fluid Power; CiA 408 or Device Profile Fluid Power
Status signals	1 status LED’s 2 colors at top lid (Run/OK; Enable, Error)
PWM frequency, cycle times	Approx. 22 kHz PWM frequency, cycle time 0,255 msec

*1: higher temperatures (storage or during operation) will reduce the life cycle of the product

4 Features (mechanical part)

- Housing made from extruded profile for main part of housing with machined bottom plate and lid
- Very rigid and high mechanical strength due to special design and usage of high quality aluminum
- Very good corrosion protection
  - aluminum sea water resistent
  - additional surface treatment „Alutin“
  - all screws in stainless steel
- Housing height can be adapted to specific requirements
- Bottom plate depending on requirements for mounting can be customized to customers requirements. Version available for specific twin solenoid for Hawe PSL/PSV valves
- Lid adaptable to all kinds of connectors. Standard are M12 connectors
- Due to symmetrical design very versatile and universal adaptable to all kinds of applications, mounting and connection situations (all on request)
- Bottom plate and lid with special groove for form seal for high protection classification --> up to IP69k possible
- Very wide variety of connection versions possible (e.g.):
  - M12 connectors (top side in lid mounted or small side)
  - AMP junior timer (top side lid mounted)
  - Deutsch (top side lid mounted)
  - EN 175301-803 /Ex DIN 43650 (top side lid mounted)
  - cable glands M12 or M16 also in stainless steel (small side mounted)
  - flying leads

5 Technical data (mechanical part)

Feature	Range, characteristics
Housing	Aluminum EN AW-6060 [AlMgSi] - sea water resistant Additional protected with surface treatment by anodizing (Alutin) Main housing extruded profile cut to length and machined Bottom plate and top lid machined from blocks including form seals All screws in stainless steel (quality A4)
Main dimensions	l = 89,8; h = 53,5; w = 47 [mm] standard version without connectors
Sealing	Viton / HNBR
LED lens	UV and oil resistant
Vibrations	EN 60068-2-6: vibration sinusoidal 10g rms (10 -2000Hz; test 3 x 100h per axis)
Shock	EN 60068-2-27: shock 30g, 11ms, half sine
IP protection	EN 60529: max. IPx9k (depending on connectors)
Salt spray	EN 60068-2-52 (IEC68-2-52) Level 1
Connection to application	M12 connectors (standard version); depending on configuration up to 6 connectors Position of connectors: 4 / 5 x M12 connectors top side; 2 x 2 connectors small side all depending on configuration or application requirements Other possible connectors (on request): AMP junior timer; Deutsch; EN 175301-803 /Ex DIN 43650 (top side lid mounted) Cable glands M12 or M16 also available in stainless steel (small side mounted) Flying leads.
Direct mounting on solenoid	Version „Hawe PSL/PSV“ --> direct mounting on twin solenoid and internally connected Mounting on other solenoids on request Cable connection via cable glands, M12 connectors or flying lead possible

Connection examples:
CANopen and top connectors

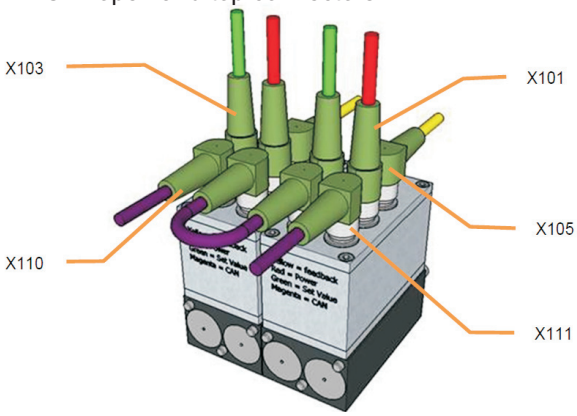

CANopen and side connectors

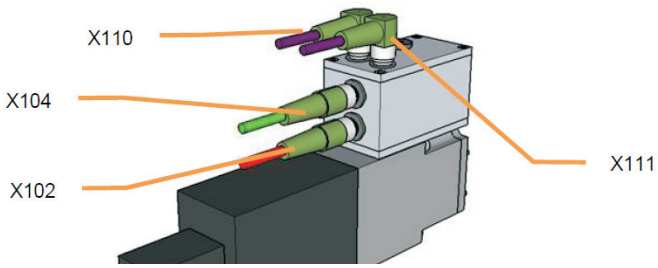

5 Application examples

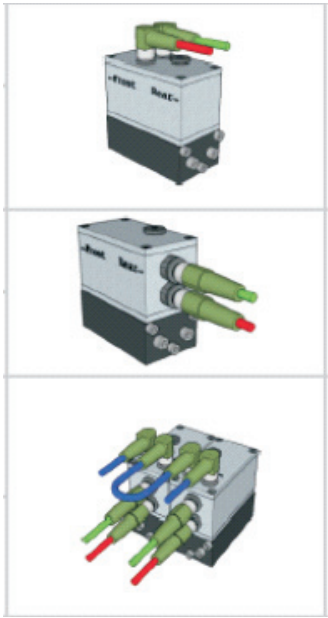

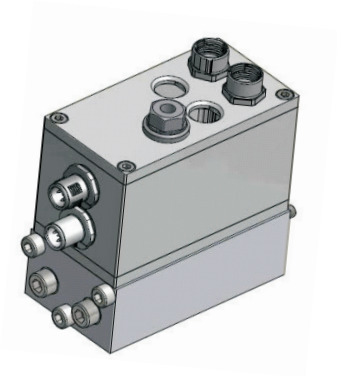

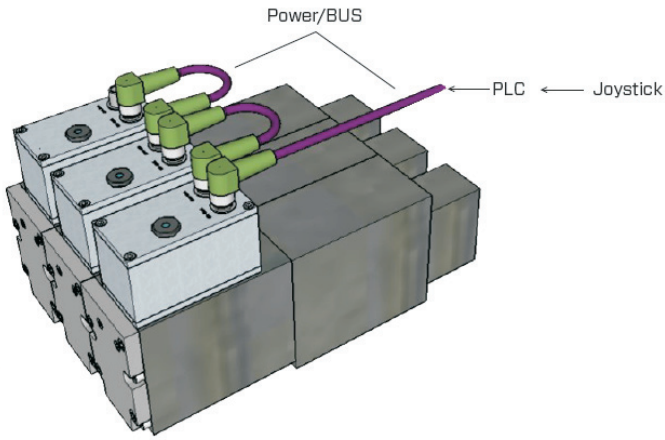

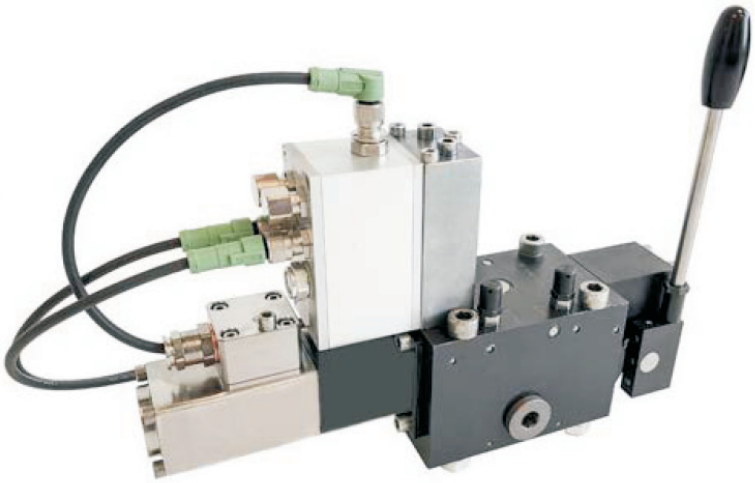

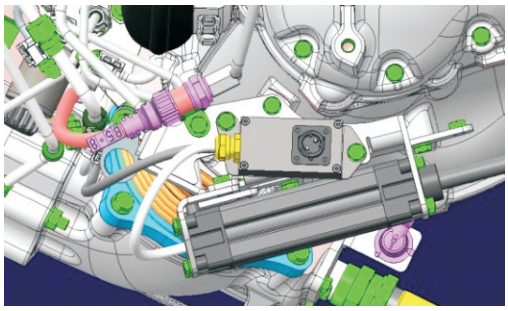

7 Connection diagram

Example diagram for version: ODC-22-**03**-xxx-S0; Operation Mode: **03**

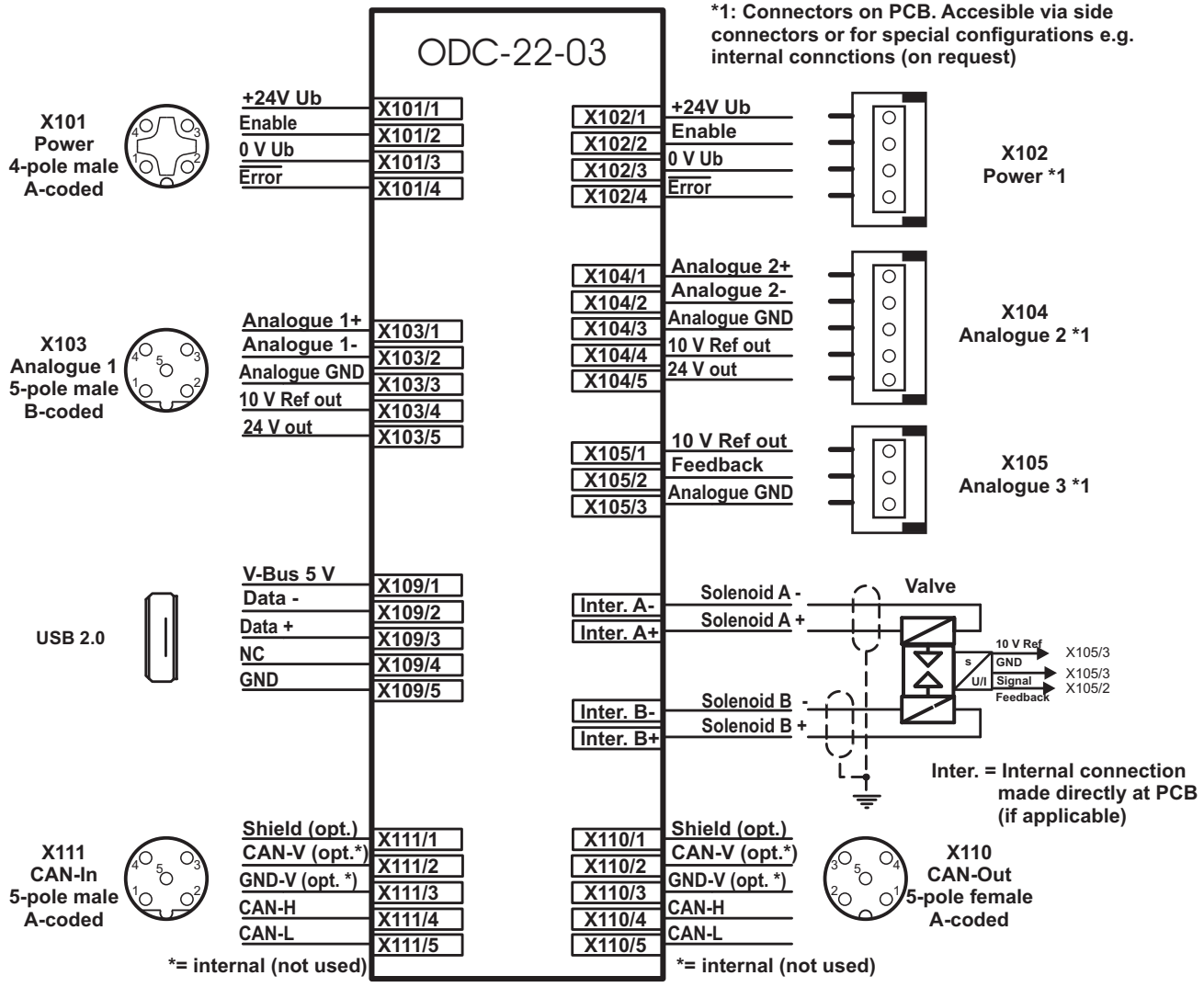

Example: Connector position and orientation; for version with M12 connectors and CAN-Bus interface

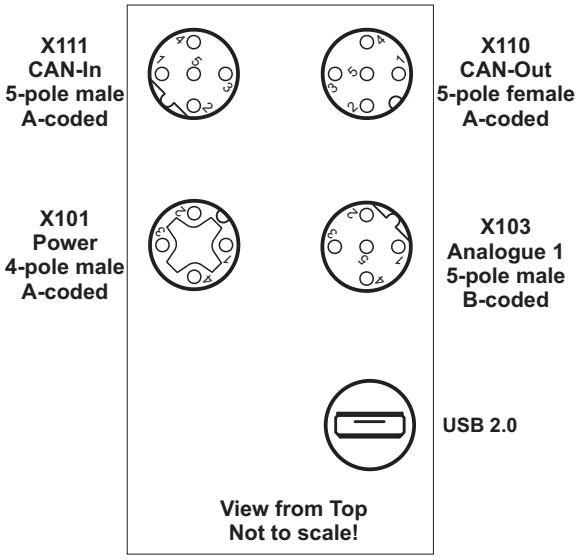

8 Block diagram of software functions

Example version: ODC-22-**01**-xxx-S0 / Operation Mode: **01** ; 1 valve with 2 solenoids without feedback

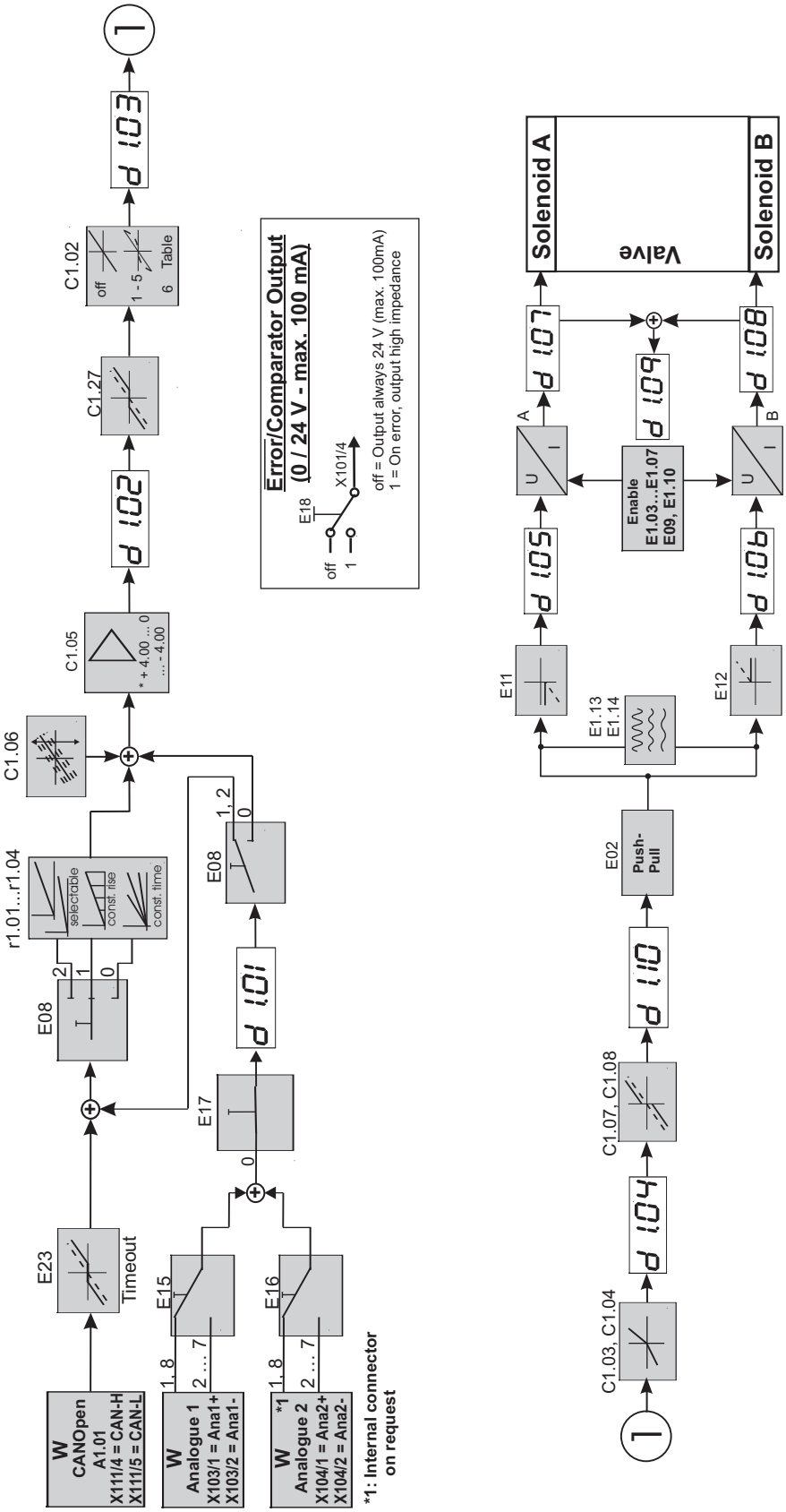

9 Block diagram of software functions

Example version: ODC-22-**03**-xxx-S0 / Operation Mode: **03** ; 1 valve with 2 solenoids and feedback

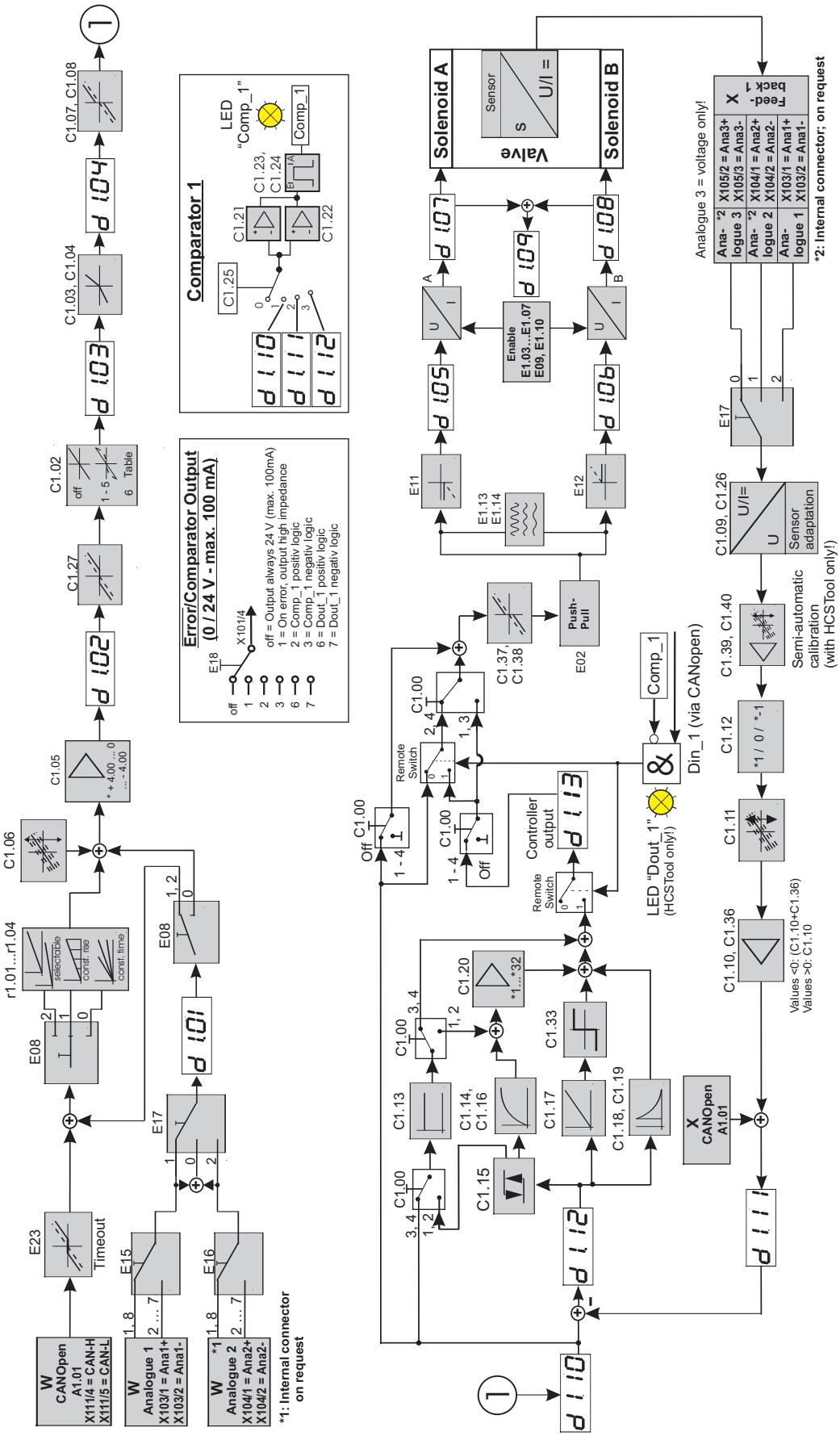

10 Block diagram of software functions

Example version: ODC-22-**04**-xxx-S0 / Operation Mode: **04** ; 1 valve with 2 solen. and process feedback

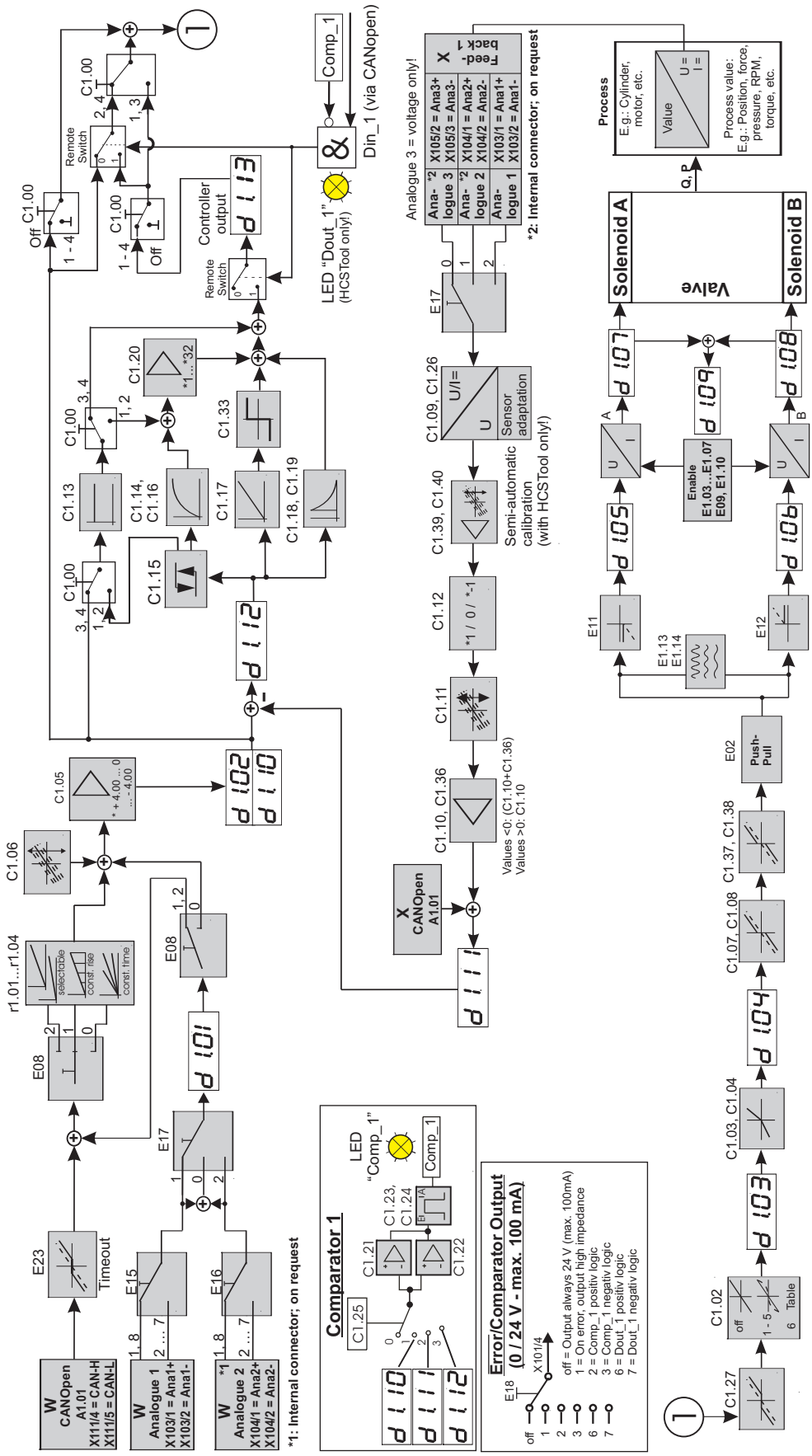

11 Block diagram of software functions

Exampe version: ODC-22-**06**-xxx-S0 / Operation Mode: **06** ; 1 valve (one solen.) with feedback and additional and process feedback

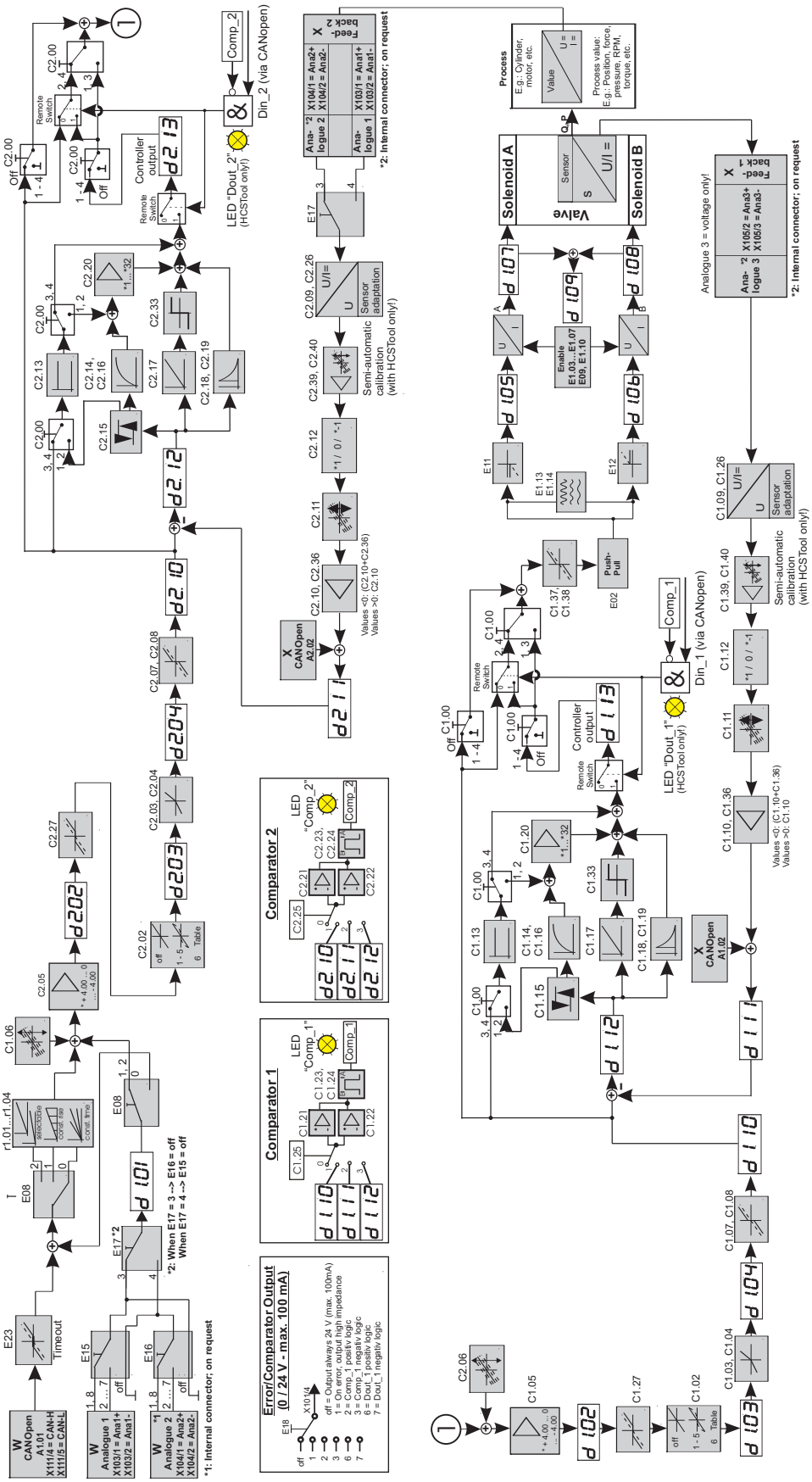

12 ODC with Bus Interface

CANopen Features:

- CANopen protocol
- Baudrate and CAN address defined by parameter
- 1 CAN-Bus according to ISO11898
- CAN-Baudraten adjustable up to 1 Mbit
- node number adjustable from 1 .. 127
- CANopen draft standard DS301 V4.0 / DS401 V2.1
- 1 receive / 1 transmit PDOs
- 1 SDO server
- PDO event timer
- PDO inhibit timer
- PDO transmit modes: event triggered, synchronous, asynchronous, cyclic, anticyclic
- variable PDO identifier
- dynamic PDO mapping
- emergencies
- nodeguarding / lifeguarding / heartbeat
- EDS file

The CAN field bus interface provides a connection to the amplifier using standard CAN frames according to ISO 11898-1…3 and ISO 11898-5:

CiA 301	CANopen application layer and communication profile CiA 303
CiA 303-1	Cabling and connector pin assignment
CiA 305	Layer setting services (LSS) and protocols
ISO 11898-1	Road vehicles -- Controller area network (CAN) -- Part 1: Data link layer and physical
ISO 11898-2	Road vehicles -- Controller area network (CAN) -- Part 2: High-speed medium access unit
ISO 11898-3	Road vehicles -- Controller area network (CAN) -- Part 3: Low-speed, fault-tolerant, medium-dependent interface
ISO 11898-5	Road vehicles -- Controller area network (CAN) -- Part 5: High-speed medium access unit with low-power mode

Device profile:

VDMA Profile Fluid Power	Device profile for Proportional Valves and Hydrostatic Transmissions VDMA Profile Fluid Power Technology Version 1.6
CiA 408 or Device Profile Fluid Power	CiA 408 Device profile for fluid power technology proportional valves and hydrostatic transmissions, Version 2.0

13 Accessories and Options

Name	Description
HCSTool	Software for parameterization, operation, monitoring, storage and documentation of adjustments. In English, French and German on CD (free download available). Please follow this link in order to download the most recent version of HCSTool: http://www.h-c-s-gmbh.de/download/
USB-USB2-USBmicro	USB connection cable. type A - micro.USB 2.0 Compatible
TBD	To be determined
EKB-04	EKB-04 Handheld keypad and display unit for parameter setting and copying
CU/DMA	Commissioning unit for DMA also applicable to ODC with according cable set. For adaptation of one ODC. For Commissioning, serviceing, testing and trouble shooting etc. at machines, systems, for laboratories and for training

Not to scale!

CU/DMA	Interface Cable	HCSTool	EKB-4
			

14 Ordering code, including bus versions (not all combinations available!)

O D C - 2 2 - 0 1 - 0 6 3 - CO - 0 - S 0

Onboard
Digital
Controller

Version
22 = ODC-22

Operation Mode / Version
01 = 1 valve w. 2 solen. w/o feedback
03 = 1 valve w. 2 solen. w. 1 feedback
04 = 1 valve w. 2 solen. w. 1 process feedb.
06 = 1 valve w. 2 solen. w. 1 feedback and procees feedb.

Solenoid Systems
Low current on-board:
015 = 150 mA system,
024 = 240 mA system,
050 = 500 mA system,
063 = 630 mA system,
080 = 800 mA system

Solenoid Systems
High current:
063 = 630 mA system,
080 = 800 mA system
100 = 1000 mA system,
125 = 1250 mA system,
180 = 1800 mA system,
200 = 2000 mA system,
250 = 2500 mA system

Bus Interface
CO = CANopen (blank if not needed)

Connection type
0 = M12 (all connectors) other on request
e.g.: AMP junior timer; Deutsch; EN 175301-803 /Ex DIN 43650 (top side lid mounted). Cable glands M12 or M16 also available in stainless steel (small side mounted). Flying leads.

Special part designation number
5 digits
Important note:
If special part desigantion number is unknow please specify with configuration template to be found on page 13.

Ordering code example:

Version for closed loop operation for valve control and 630 mA solenoid

ODC-22-03-630-Sxxxxx

15 Configuration template

TBD

16 Confirmation of conformity

Neuffener Strasse 29
D-72636 Frickenhausen
Tel: (+49) 7025 - 911 007
Fax: (+49) 7025 - 911 008
Email: info@h-c-s-gmbh.de
www.h-c-s-gmbh.de

EC Declaration of Conformity in accordance with EMC Directive 2014/30/EU

HCS Hydraulic Control Systems GmbH
Neuffener Str. 29
D-72636 Frickenhausen

hereby declares that the product described as follows complies in terms of its design, as well as in the version placed in the stream of commerce by us, with the relevant requirements of the directive. This declaration is void in the event of any changes to the product without our written agreement.

Product:	Onboard Digital Amplifier and Controller
Intended use:	Automation systems (industrial applications)
Model:	ODC-2
Rated voltage:	24 V DC; SELV
Rated power:	max. 20 W
Protection class:	III
Protection degree:	IP65 (IP67 or IP69 on request and depending on connectors)
Relevant EU Directive:	EMC Directive 2014/30/EU
Applicable EU Standards:	
Emissions:	EN 61000-6-3:2007 + A1:2011 EN 61000-6-4:2007 + A1:2011 Germanischer Lloyd VI-7-2 (EN 60945) on request
Immunity:	EN 61000-6-2: 2005

Date/manufacturer's signature

01.01.2018
Details of signatory: Dipl.-Ing. (FH) Peter Deuschle (General Manager)

17 Our partners and distributors

Europe I

NORWAY, ALL NORDIC COUNTRIES

Servi AS
Rasmus Solbergs vei 1
N-1400 Ski
Norway
Tel.: (+47) 64 - 979 797
Fax: (+47) 64 - 979 899
Borre.Kleven@servi.no
www.servi.no

SWEDEN I (South-West)

PMC Hydraulics AB
Askims Verkstadsväg 15
Box 1013
SE-43621 Askim
Sweden
Tel.: (+46) 31 - 28 98 40
Fax: (+46) 31 - 28 64 01
Per-Anders.Kallden@pmchydraulics.se
www.pmchydraulics.se

SWEDEN II (North-East)

Norrlands Hydraulik
Stenhuggargatan 4
SE-913 35 Holmsund
Sweden
Tel.: (+46) 70 - 646 57 57
kurt.w@norrhyd.se
www.norrlandshydraulik.se

SWITZERLAND

GRIBI Hydraulics AG
Lättenstr. 33
CH-8952 Schlieren
Switzerland
Tel.: (+41) 1 - 733 - 40 50
Fax: (+41) 1 - 730 - 58 05
info@gribi-hydraulics.ch
www.gribi-hydraulics.ch

GREAT BRITAIN

Voith Turbo Ltd.
6 Beddington Farm Road
Croydon, Surrey
England CRO 4XB
Tel: (+44) 208 - 667 0333
Fax: (+44) 208 - 667 0403
nick.moody@voith.com
www.uk.voithturbo.com

FRANCE

SEFYDRO
Pôle République 1
23, Rue des Entrepreneurs
BP 1086
F-86060 POITIERS
Tel. : (+33) 549 - 607 016
Fax. : (+33) 549 - 602 480
bureau.etudes@sefydro.fr
www.sefydro.fr

ITALY I

BIMAL Spa

Via Monni 18/14.
I-06135 Perugia (PG
Italy
Tel.: (+39) 075 - 592 1770
Fax: (+39) 075 - 592 1780
a.paolucci@bimal.com
www.bimal.com

ITALY II

Sotek S.r.l.

Via Monni 18/14.
I-06135 Perugia (PG)
Italy
Tel.: (+39) 075 - 592 8710
c.castellari@sotek.it
www.sotek.it

ITALY III

Asterisco Tech s.r.l.

Via C. Bozza, 14
06073 Corciano (PG)
Tel.: +39 075 7825790
Fax: +39 075 7823791
gianni.cruciani@asteriscotech.com
www.asteriscotech.com

17 Our partners and distributors

Europe II / ROW I

SPAIN I

HRE HIDRAULIC S.L.
C / Ibaitarte, 21
E-20870 Elgoibar
Spain
Tel.: (+34) 943 - 742 130
Fax: (+34) 943 - 742 708
hre-hidraulic@hre.es
www.hre.es

SPAIN II

GLUAL HIDRÀULICA, S.A.
Landeta Hiribidea, 11
E-20730 Azpeitia (Gipuzkoa)
Spain
Tel.: (+34) 943 - 157 015
Fax: (+34) 943 - 157 404
j.valverde@glual.es
www.glual.com

USA I

SERVI FLUID POWER INC.
22240 Merchants Way | Suite 100
Katy, TX 77449, USA
Tel.: (+1) 281 - 347 8080
info@servi-inc.com
www.servi-inc.com

USA II

NC SERVO TECHNOLGY INC.
38422 Webb Drive
Westland, MI 48185-1974, USA
Tel.: (+1) 800 - 327 3786
Tel.: (+1) 734 - 326 6666
Fax: (+1) 734 - 326 6669
sales@ncservo.com
www.ncservo.com

CANADA and USA VI

HYDRA-FAB FLUID POWER INC.
3585 Laird Road Unit 5
Mississauga, Ontario L5L 5Z8
Canada
Tel.: (+1) 905 - 569 1819
Fax: (+1) 905 - 569 7801
rgores@hydrafab.com
www.hydrafab.com

USA III

Hawe Hydraulik - East
9009-K Perimeter Woods Drive
Charlotte, NC 28216, USA
Tel: (+1) 704 - 509 1599
Fax: (+1) 704 - 509 6302
sales@hawehydraulics.com
www.hawe.com

USA IV

Hawe Hydraulik - Central
10920 W. Sam Houston Pkwy N.
Suite 700
Houston, TX 77064
Tel: (+1) 713 - 300 3260
Fax: (+1) 281 - 970 6692
sales@hawehydraulics.com
www.hawe.com

USA V

Hawe Hydraulik - West
912990 S.E. HWY 212
Clackamas, OR 97015, USA
Tel: (+1) 503 - 222 3295
Fax: (+1) 503 - 225 5976
sales@hawehydraulics.com
www.hawe.com

17 Our partners and distributors

ROW II

ASIA

KC Kim Consulting GmbH
Support in German, English, Chinese and Korean
Industrial Engineering Im- und Export
Lilienthalstr. 3
D-30916 Isernhagen
Tel: (+49) 0511 - 898809-17
Fax: (+49) 0511 - 898809-29
info@kc-co.com
www.kc-kim.com

AUSTRALIA I (Brisbane)

Hydraulic Specialists Australia Pty Ltd
21 Production Street, Wacol
Queensland,
Australia, 4076
Tel: (+61) 07 - 3879 4400
Fax: (+61) 07 - 3879 4333
brisbane@hsaus.com.au
lharley@qldhsaus.com.au
www.hsaus.com.au

AUSTRALIA II (Melbourne)

Hydraulic Specialists Australia Pty Ltd
9 National Drive , Hallam
Victoria
Australia, 3803
Tel: (+61) 03 - 9796 5433
Fax: (+61) 03 - 9796 4955
melbourne@hsaus.com.au
lharley@qldhsaus.com.au
www.hsaus.com.au

BRASIL, SOUTH AMERICA

Multi Pecas Prestacao de Servicos EIRELI-M
Rua Manoel Mestre, 20 – Sala 01
Vila Rica
18052-350 Sorocaba / SP – Brasil
Tel: (+55) 15 - 3281 4971
Mobile: (+55) 15 - 98141 8530
friedrich.guther@hotmail.com

INDIA

Greentech Engineers Australia
Mr. Vish Karegowda
contact@greentechea.com.au
www.greentechea.com.au
Skype : grnhorizon