Manual for

DMA-22(A)

Universal On-Board and Stand-Alone Digital Amplifier and Controller

	Model Code	SW Version	Remarks
Applicable for SW Versions:	DMA-22(A)-01-x-PN-x Operation Mode: 01	V 13.xx	xx = 01 or higher * = a, b, …. x = additional options
	DMA-22(A)-02-x-PN-x Operation Mode: 02	V 27.xx V 28.xx	
	DMA-22(A)-x-PN-x Operation Mode: 03, 04, 06, 08	V 48.xx	
	DMA-22(A)-x-PN-x-SANAout Operation Mode: 03, 04, 06, 08, 10, 11	V 49.xx	
	DMA-22(A)-05-x-PN-x-S10Vref Operation Mode: 04, 05	V 53.xx	
	DMA-22(A)-03-020-PN-x-SServo Operation Mode: 03, 04 Servo	V 72.xx	

HCS Hydraulic Control Systems GmbH
Neuffener Str. 29
D-72636 Frickenhausen
Germany
Telefon: (+49) 7025 - 911 007
Telefax: (+49) 7025 - 911 008
Email: info@h-c-s-gmbh.de
Web: www.h-c-s-gmbh.de

Revision History

Revision	Date	Description
R1.0	14.07.2022	First edition
R1.0	15.07.2022	Mode 1,2 added
R1.0	24.08.2022	Connection diagram changed
R1.0	12.09.2022	Wiring diagrams, technical data, supply voltage range updated
R1.0	30.09.2022	LED display, while Profibus timeout defined
R1.0	07.06.2023	SP1..SP4 *)The designation and availability of the input depends on the module variant.
R1.1	17.01.2024	SW Versions added. Modification in TIA Portal example
R1.2	30.04.2024	SW version 28.xx Versions added
R1.3	20.05.2024	The parameters E2.03 to E2.14, C1.41 added in parameter list
R1.4	08.07.2024	Function block definition for Special SW in Mode2
R1.4	18.07.2024	Blinking Error LED
R1.5	10.08.2026	E18 range for SW Version V4x.02* expanded, selection 9 added. Error/Comp Output Bit for CMD15 added

Table of Content

1 ABBREVIATIONS 5

2 TERMS AND DEFINITIONS 5

3 GENERAL INFORMATION 5

3.1 ABOUT THIS MANUAL 5
3.2 SCOPE 6
3.2.1 Copyright 6
3.2.2 Documents place of storage 6
3.2.3 Warning signs, symbols and notes 6
3.2.4 Safety and liability 7
3.2.5 General information 8
3.3 TERMS AND CONDITIONS 9
3.4 DELIVERY STATE (DEFAULT SETTING) 9
3.5 CORRECT PRODUCT USE 9
3.6 NON-INTENDED PRODUCT USE 9
3.7 SELECTION AND QUALIFICATION OF PERSONNEL 10
3.7.1 Inquiries and ordering 10
3.7.2 Service and repair 10
3.7.3 Cleaning, storage, transport 10
3.7.4 Delivery state (default setting) 11
3.8 INTRODUCTION 11
3.9 GENERAL APPLICATIONS 11

4 TECHNICAL DATA 12

4.1 TECHNICAL DATA OVERVIEW 12
4.2 MODEL CODE 13
4.3 FEATURES OF THE DEVICE 14
4.4 USED GSDML FILE 14
4.5 PROGRAMMING PC INTERFACES 14
4.6 CONNECTOR DEFINITION 14
4.6.1 Connector position layout 14
4.7 MODE 1,2 POSSIBLE CONNECTOR OPTIONS (OTHER ON CUSTOMER REQUEST) 14
4.7.1 Mode 3,4,5,6,8,10,11 possible connector options (other on customer request) 15
4.8 CONNECTION DIAGRAM 15
4.8.1 Mode 1 15
4.8.2 Mode 2 16
4.8.3 Mode 3, 4 – SW V 72.xx Servo valve 16
4.8.4 Mode 3, 4 17

4.8.5 Mode 5 ... 18
4.8.6 Mode 6 ... 18
4.8.7 Mode 8 ... 19
4.8.8 Mode 10 ... 19
4.8.9 Mode 11 ... 20
4.9 DEVICE CONTROLLER STRUCTURE ... 20
4.9.1 Block diagram ... 20
4.9.1.1 Option "analog output" -SANAout ... 20
4.9.1.2 Mode 1, Open loop, 1 valve ... 21
4.9.1.3 Mode 2, Open loop, 2 valves ... 21
4.9.1.4 Mode 3 Closed loop, 1 valve ... 22
4.9.1.5 Mode 3 -SServo Closed loop, 1 valve ... 23
4.9.1.6 Mode 4, Closed loop, 1 process ... 24
4.9.1.7 Mode 4 -SServo, Closed loop, 1 process ... 25
4.9.1.8 Mode 5, Closed loop, 1 process ... 26
4.9.1.9 Mode 6, Closed loop, 1 valve, 1 process ... 27
4.9.1.10 Mode 8, Closed loop, 2 processes ... 28
4.9.1.11 Mode 10 -SANAout, single closed loop – no valve ... 29
4.9.1.12 Mode 11 -SANAout, double closed loop – no valve ... 30
4.10 INPUTS ... 31
4.11 OUTPUTS: ... 31
4.12 FRONT VIEW: ADDRESS SELECTION AND CONNECTORS ... 31
4.12.1 Single module Version (node with one module connected) ... 31
4.12.2 Multiple module Version (node with multiple modules connected) ... 32

5 GENERAL COMMUNICATION INFORMATION ... 32

5.1 SPECIAL INFORMATION FOR MULTI-SLAVE NODES ... 32
5.2 GENERAL INFORMATION ABOUT TADR (TELEGRAM ADDRESS) ... 33
5.3 GENERAL INFORMATION ABOUT CMD (COMMAND) AND SADR (SLAVE ADDRESS) ... 33

6 SIMPLE COMMANDS ... 34

6.1 CMD 3 MASTER READ ... 34
6.1.1 CMD = 3, Master Read parameters (7 bytes) ... 34
6.1.2 CMD = 3, Response from Slave (4 + CNT bytes) ... 34
6.1.3 CMD = 3, Error from Slave (4 bytes) ... 35
6.2 TELEGRAM EXAMPLE CMD = 3 ... 35
6.3 CMD = 6, MASTER WRITE ... 36
6.3.1 CMD = 6, Master Write single parameter (7 bytes) ... 36
6.3.2 CMD = 6, Response from Slave (7 bytes) ... 36
6.3.3 CMD = 6, Error from Slave (4 bytes) ... 37
6.4 TELEGRAM EXAMPLE CMD = 6 ... 37
6.4.1 Example, write parameter ... 37
6.4.2 Example, write set value ... 38

7 COMPLEX COMMANDS ... 39

7.1 CMD = 15, MASTER WRITES MULTIPLE PARAMETERS (3+5·MODULE BYTES) ... 39
7.2 CMD = 15, RESPONSE FROM SLAVE (9 BYTES) ... 40
7.3 CMD = 15, ERROR FROM SLAVE (4 BYTES) ... 40
7.4 EXAMPLES, CMD = 15 ... 41
7.4.1 Single slave ... 41
7.4.2 Multiple-slave (3 DMA modules) ... 41
7.5 CMD = 15, STRUCTURE OF PROFINET TELEGRAM DEFINITION, DEPENDING ON SW VERSIONS ... 43
7.5.1 General ... 43
7.5.1.1 Error Message (indication by „Error occurred") ... 43
7.5.1.2 Explanation for „Hardware Enable" and „Software Disable": ... 43
7.5.1.3 Explanation of special functions and module state bits ... 44
7.5.2 Version for Mode 1 (open loop, one valve with two solenoids) ... 45
7.5.3 Version for Mode 2 (open loop, two valves with one solenoid each) ... 46
7.5.4 Version for Mode 2 with separate enable (open loop, two valves with one solenoid each) ... 47

7.5.5 Version for Mode 3, 4, 10 (closed loop) ... 48
7.5.6 Version for Mode 6, 11 (two closed loops) ... 49
7.5.7 Version for Mode 8 (closed loop) ... 50
7.6 DIGITAL INPUTS ... 51
7.6.1 Digital input 0 (enable signal) input 1,2 (set Value selection) ... 51
7.7 DIGITAL OUTPUTS ... 52
7.7.1 Digital output: \Error or Comparator output ... 52
7.7.2 Internal supply output ... 52
7.7.3 Analog voltage output ... 52
7.8 STATUS DISPLAY LEDS ... 53
7.8.1 LED definition ... 53
7.8.2 LED status definition ... 53

8 PLC CONFIGURATOR ... 54

9 CONFIGURATION FOR SIEMENS TIA PORTAL ... 55

9.1 SETUP THE NETWORK CONFIGURATION FOR THE DMA MODULE ... 55
9.2 ASSIGN THE IO-MODULE FROM THE GSD TO THE DEVICE ... 57
9.3 INSTALL THE FUNCTION BLOCK ... 57
9.4 EXPLANATION OF THE FUNCTION BLOCK ... 58
9.4.1 General ... 58
9.4.2 Classic CPU 300,400: Definition of the data buffer address ... 59
9.4.3 CPU 1200,1500: Specification of the data buffer address based on the hardware identifier ... 59
9.4.4 CMD 3, Reading values from one DMA-2 node ... 61
9.4.5 CMD 6, Writing Parameters to one DMA-2 node ... 62
9.4.6 CMD 15, Writing and Reading once to all connected DMA nodes ... 63

10 LIST OF PARAMETERS ... 65

11 TROUBLESHOOTING ... 70

11.1 GENERAL ... 70
11.2 NO PROFINET COMMUNICATION IS POSSIBLE ... 70
11.3 COMMUNICATION OK, BUT CURRENT OUTPUTS ARE INACTIVE ... 71
11.4 PNO CERTIFICATE ... 72

12 DECLARATION OF CONFORMITY ... 73

13 NOTES: ... 74

14 HCS DISTRIBUTORS AND PARTNERS ... 74

1 Abbreviations

Abbreviation	Description
DMA	**D**igital **M**odule **A**mplifier
EMC	**E**lectro **M**agnetic **C**ompatibility; properties of the unit in order to comply with the EMC directive
USB	**U**niversal **S**erial **B**us; interface for communication between a PC and the DMA-22(A)
PC	**P**ersonal **C**omputer
µC	**M**icro **C**ontroller; CPU used inside the unit to control all functions
mamsl	**m**eters **a**bove **m**edian **s**ea **l**evel
IP65	Protection Class; solid particle protection and protection level against water ingress
LED	**L**ight **E**mitting **D**iode
PWM	**P**ulse **W**idth **M**odulation; method to control the output current at low power losses
Ub	Supply voltage
FS	**F**ull **S**cale

Table 1: Abbreviations

2 Terms and Definitions

Term	Description
HCSTool	Software tool provided by HCS in order to adjust and parametrize DMA-22(A) units
CANopen	Bus interface for digital communication, defined by CIA
PROFIBUS	Process Field Bus interface for digital communication, defined by BMBF (German department of education and research) and used by Siemens
PROFINET	Process Field Net interface for digital communication, the standard is maintained and supported by PROFIBUS & PROFINET International
ETHERNET/IP	(IP = Industrial Protocol) is an industrial network protocol that adapts the Common Industrial Protocol to standard Ethernet
USB-C connector	Connector type used on the USB interface

Table 2: Terms and definitions

3 General information

3.1 About this manual

This document describes the Profinet interface of the HCS digital amplifier.
It describes and explains the general structure of the Profinet interface and in a second part the device specific

This manual was prepared with great care and the contents reflect the author's best knowledge. However, the possibility of error remains and improvements are possible. Please feel free to submit any comments regarding errors or possibly incomplete information to HCS GmbH.

DANGER

Read this manual carefully before working with the digital amplifier cards!

The general and especially the safety instructions of this manual have to be observed in any case!

Electronic equipment of all kind can have component failures or software may lead to unpredictable reactions. Secondary safety measures must be taken in order to ensure safety under all circumstances. This is especially the case for safety critical applications.

Furthermore, it is the responsibility of the user to always comply with applicable safety standards (e.g. EN 13849) and to implement a system architecture capable to cover all safety requirements. The unit itself does not comply with any performance level given in EN 13849 or any SIL level as per EN 61508.

Applicable laws and safety standards have to be observed at any time. Before commissioning or using the equipment, the necessary risk analysis must be conducted and suitable protection measures must be taken.

HCS GmbH refuses any liability in case of omission to comply with these requirements.

3.2 Scope

With the help of this document a professional, competent and trained user should be able to install, wire, connect, commission, set parameters, perform fault analysis and fix issues. Also the document will provide the user any technical and operational details necessary to safely operate the product. It remains the users responsibility to set-up a safe working environment while operating the product.

The information contained in this manual is valid at the time of this version's release. See footer for version number and release date of this manual.

3.2.1 Copyright

© All rights reserved. Except for the usual review purposes, no part of this work may be reproduced or transmitted in any form or by any means, electronic or mechanical, including photocopy, recording, or any information retrieval system, without the written permission of **HCS HYDRAULIC CONTROL SYSTEMS GmbH** (following referred to as HCS).

3.2.2 Documents place of storage

This manual and all other associated documentation for hardware and software must always be kept in a location where they will be readily accessible and close to the digital amplifier and controller card DMA-22(A) or the equipment in which it is installed.

3.2.3 Warning signs, symbols and notes

⚠ DANGER

Identifies safety instructions that are intended to warn of an immediate and impending danger to life and limb. Failure to observe these safety instructions will – with a very high probability - lead to death, serious personal injury (disablement)!

⚠ WARNING

Identifies safety instructions that are intended to warn of potential danger to life and limb. Failure to observe these safety instructions might lead to death, serious personal injury (disablement)!

⚠ CAUTION

Identifies safety instructions that are intended to warn of slight personal injury. Failure to observe these safety instructions might lead to slight personal injury.

NOTICE

Failure to observe this safety notice can result in property damage!

Identifiers important information

Other identifiers (when applicable):

Identifier	Description
●/ -	Listings
□	References to another chapter, page, table or figure in this manual
blue text	Hyperlink within the document
1., 2., …	Steps in a procedure that should be performed in consecutive order
'STATE'	States of a state machine
«ES»	LEDs of the amplifier (for example, «ES»)
< >	parameter name
"…"	Used for references

Table 3: Identifiers

3.2.4 Safety and liability

NOTICE

The information in this document is subject to change without further notice.
HCS assumes no responsibility for any faults that may appear in this manual.

This operating manual represents the knowledge of HCS and during the drafting of this operating manual the greatest possible care was taken. Nevertheless, HCS disclaims any responsibility and liability claims for individual applications of the user. This is particularly true in cases of non-compliance, omissions, faults, misinterpretations and misunderstandings.

Applicable laws and safety standards have to be observed at any time. Before commissioning or using the equipment, the necessary risk analysis must be conducted and suitable protection measures must be taken.

This manual only describes the functionality and influence of the parameters. The described software functionality can be used in various amplifier models which can be implemented in a vast range of applications. Hence it is not possible to assume liability for the influence of the parameters.

HCS GmbH refuses any liability in case of omission to comply with these requirements.

⚠ WARNING

In the case of applications with critical safety requirements or where accident prevention regulations must be observed, it may be necessary to isolate the components from the solenoids with relays in e-stop circuits.

To switch off the enable signal (0 V at terminal 8d) is insufficient. In these cases, hydraulic and/or mechanical safety measures to stop the drive must be provided (e.g. through switching valves with position monitoring).

⚠ WARNING

All types of proportional directional valves, which may be used in all kinds of different environments and applications, can eventually fail and hence are able to cause damage.

It is the customers obligation to analyze all safety related aspects of the application. It is within the full responsibility of the machine builder and/or system integrator to make the final selection of products and reassure and confirm that all requirements regarding safety and performance are met.

The procedure of selecting the proper control system and related safety levels is covered by the machine directive EN 13849.

NOTICE

Liability for any content of this document is rejected!

Any claims against HCS GmbH – based on whatever legal reason – resulting from the use of the information, programs, engineering and performance data etc., described in this document shall be excluded. Exclusion in such cases shall not apply for mandatory liability, e.g. under the "Product Liability Act", in case of intent, gross negligence, or injury of life, body or health, guarantee for the quality of a product, fraudulent concealment of a deficiency or breach of a condition. Damages for breach of a substantial contractual obligation are, however, limited to the foreseeable damage, typical for the type of contract, except in the event of intent or gross negligence or injury to life, body or health. The above provisions do not imply a change of the burden of proof to your detriment.

We reserve the right to make changes to this document at any time without prior notice.

3.2.5 General information

⚠ WARNING

ESD (electrostatic discharge) may damage components on the card. In order to prevent any damage please always follow the recommendations below!

Discharge static voltage from your body by using best practice.
Work in safe environment and do not use any devices in the working surrounding which could generate or hold static charge. Avoid using the product in areas where floors or surfaces are composed of materials that could generate static charges.

Handle all equipment very carefully and do not touch exposed pins or components.

Store and transport the units only in its original packaging.

⚠ WARNING

During commissioning, particular attention must be paid to the correct design and realization of the wiring. This must be checked before applying the supply voltage.

To avoid collisions, the safety devices and limit switches must be activated. All safety regulations are to be observed.

Monitoring the fault signal (terminal X3/10) is recommended.

Malfunctions can occur with the following:

- Changes to the settings made by the supplier.
- Neglecting of operating parameters (e.g. supply voltage, application of inadmissible signals on inputs or outputs, ambient conditions, wiring, unsafe loads such as motors, contactors, relays, ohm loads, etc.)
- Faults in series-connected controls components and set points or actual values
- Faults in the subsequent hydraulic components
- Removing of solenoids connections.

3.3 Terms and conditions

Please pay attention to our general terms and conditions (available on request).

3.4 Delivery state (default setting)

The product is shipped in a ready-to-use state (default settings). After correct installation and setting of all parameters relevant for the application, the amplifier card is ready for use.

3.5 Correct product use

The digital module amplifier “DMA-22(A)-x-PN” are used for the following applications:

- Controlling of proportional valves (namely directional control valves); with or without feedback (depending of operation mode).
- Controls the delivery volume of a pump with a proportional or servo valve in terms of pressure and performance, without the need for hydraulic-mechanical control parts.
- For industrial applications only.

The operation of other inductive or resistive loads is not recommended (motors, heaters, etc.). If you are considering any applications like this please contact HCS GmbH.

If used correctly, the safety of the user as well as the safe and proper function of the amplifier DMA-22(A) is given.

3.6 Non-intended product use

The digital amplifier and controller cards “DMA-22(A)-x-PN” should not be used in the following cases:

- if noticeably damaged
- when the electrical connections are damaged
- if they do not function correctly
- after incorrect handling or storage
- in non-appropriate applications or environments.

In these cases, the digital amplifier and controller card must be disabled and secured against accidental restarting.

In the case of applications with critical safety requirements or where accident prevention regulations must be observed, it may be necessary to isolate the components from the solenoids with relays in e-stop circuits. In these cases, hydraulic and/or mechanical safety measures to stop the drive must be provided (e.g. through switching valves with position monitoring).

During commissioning, particular attention must be paid to the correct design and realization of the wiring. This must be checked before applying the supply voltage.

To avoid collisions, the safety devices and limit switches must be activated. All safety regulations are to be observed.

Malfunctions can occur when:

- Changes to the settings made by the supplier.
- Neglecting of operating parameters (e.g. supply voltage, application of inadmissible signals on inputs or outputs, ambient conditions, wiring, unsafe loads such as motors, contactors, relays, ohm loads, etc.)
- Faults in series-connected controls components and set points or actual values
- Faults in the subsequent hydraulic components
- Removing of valve connection.

3.7 Selection and qualification of personnel

Only qualified users may work with the amplifier. Qualified users are properly trained experts with the required knowledge and experience. In particular, these experts must have the authorization to bring into operation systems and power circuits in accordance with safety engineering standards. They must be familiar with safety concepts common in automation.

3.7.1 Inquiries and ordering

To order the product, the complete order code is requested.
see □ Chapter „4.2 Model code", page 13
Please pay attention to our general terms and conditions (available on request) and forward orders and enquiries to the companies as listed on our web page:

Sales Partners (h-c-s-gmbh.de)

https://www.h-c-s-gmbh.de/en/sales-partners

They are our official distributors/partners. We reserve the right to forward any direct inquiries or orders to our distributors/partners. Nevertheless, we will be available for any necessary technical support.

Germany and other countries without distributor/partner:

Neuffener Strasse 29
D-72636 Frickenhausen
Tel: (+49) 7025 - 911 007
Fax: (+49) 7025 - 911 008
Email: info@h-c-s-gmbh.de
www.h-c-s-gmbh.de

3.7.2 Service and repair

⚠ WARNING
Do not attempt - under any circumstances - to repair the product yourself

After repair, certain adjustments and test procedures must be performed; this can only be made by qualified and authorized personnel. Products that need repair can be sent to the addresses:
See □ Chapter "3.7.1 Inquiries and ordering", page 10
Please enclose a detailed description of the error, malfunction or failure with the sent item and state the serial number and the purchase date. This will speed up the process and guarantees a fast and reliable repair.
See □ Chapter "3.7.1 Inquiries and ordering", page 10
In the case of a fault or a malfunction, your distributor can give you instructions on the phone or in writing before accepting a repair order. For service and repair, we offer experienced and qualified personnel. In case you need our assistance, please contact the address:
See □ Chapter "3.7.1 Inquiries and ordering", page 10

3.7.3 Cleaning, storage, transport

The product should only be transported and stored in the original packaging to ensure suitable protection against mechanical damage as well as electrostatic discharge.

- Keep the amplifier card away from moisture and dust
- Observe the allowed storage and transportation temperature range
- If it should be necessary to clean the amplifier, we recommend sending it back to the manufacturer or any distributor and partner:
  See □ Chapter "3.7.1 Inquiries and ordering", page 10

⚠ CAUTION
Unpacking and handling should be left to suitably trained personnel. **Beware of damaging the amplifier by electrostatic discharge**

3.7.4 Delivery state (default setting)

The product is shipped in a ready-to-use state (default settings). After correct installation and setting of all parameters relevant for the application, the digital amplifier and controller card is ready for use.

3.8 Introduction

The digital module amplifier and controller “DMA-22(A)-x” features leading edge technology. This electronic device meets the industrial standards for EMC. This ensures a high interference security and low interference emission.

The performance characteristics are possible through the use of the most current microprocessor technology (32-bit floating-point CPU) combined with other state of the art components. In addition to all control functions, the microprocessor also handles closed-loop control. The system features are essentially determined by the software and provide reserve capacity for further developments and adaptations.

The following features distinguish the “DMA-22(A)-x” series:

- Fully digitized amplifier card with the advantage of
  - no on-board potentiometer
  - no jumper settings required
  - digital setting and display of all parameters by means of PC with HCSTool
  - user safety during parameterization
- flexible and reliable system:
  - use of a modern 32-Bit floating point µC
  - high performance and yet power reserve
  - high reliability and safety through the use of a integrated watch-dog and reset function
  - variable settings for magnetic systems making high flexibility possible
- functional use of the interface:
  - change of selected parameters “on-the-fly” without interference or interruptions of the working cycle
  - analyzing of system performance through selection of display parameters with the PC and by using the 4-channel oscilloscope function included in HCSTool
  - bus interfaces available (PROFIBUS/PROFIDRIVE, PROFINET, ETHERNET/IP, CAN-OPEN)

3.9 General Applications

The amplifier card “DMA-22(A)-x” is generally used for

- Controlling of hydraulic motors, - installations and – systems, e.g.:
  - position
  - speed
  - pressure
  - revolutions per minute
  - torque
  - power etc.

- Controlling of different process values:
  - pump controlling
  - controlling of pressures
  - controlling of pilot- and main stage
  - cascade controlling of components etc.

4 Technical data

4.1 Technical data overview

Feature	Range, characteristics
Model	Modular digital amplifier in snap-on mounting technology
Supply voltage	10 V DC ... 32 V DC; residual ripple < 10 % (max. 50 VA power draw)
Duty cycle	100 %
Preliminary fuse	3.15 A; quick blowing
Ambiant operating temperature	- 40 °C ... + 70 °C
Storage temperature	- 45 °C … 85 ° C
Humidity (relative air humidity)	max. 95 % non condensing
Max. elevation	2,000 m (mamsl)
Class of protection	IP20 (EN60529)
EMC	In accordance with the applicable industrial standards (CE - conformity) *1
Connection, type of connector	16 pole (4 x 4); screw terminals for 0.2 - 2.5 mm² (AWG 24 -12) Phoenix Combicon connector with screw terminals, type: MSTBT 2,5/ 4-ST for detailed technical data refer to Phoenix Contact Combicon Product Catalog
Cable specification	1.5 mm² (AWG16) for supply and solenoids, shielding recommended, max length: 50 m 0.5 mm² (AWG20) for analog and digital signals, shielding mandatory, max length: 50 m
Mounting/housing	Mounting: top-hat rail (mounting rail) in accord. with EN50022 with inetgrated PE contact Housing configuration: ventilated (IP20) Material: PA 66 - FR (blue); flammability in accordance with UL94V0 Dimensions approx.: (w x h x d) 22,5 x 100 x 114 mm Weight: approx. 0.13 kg (inlcuding mating connectors)
Mounting postion	Any; preferably vertical for better heat dissipation through convection
Analog set value input	0 … +-10 V or 4 ... 20 mA (parameter selectable) with 16 Bit resolution (volt. = differential) Input resistance: voltage input = 200 kOhm; current input = 255 Ohm
Analog feedback input	12 V ... +- 2.5 V Special input for PRL2 LVDT spool position transducer with filter function
Digital inputs	1 input (ENABLE);
Signal range for digital inputs	0 ... 2.6 V = low; > 9 V = high; current draw input < 20 mA; input resistance: 20 kOhm
Solenoid current (output)	2 PWM output stages, each for up to 3,5 A (with over-energ. and quick de-energization)
Solenoid system selection	0.8 A; 1.1 A; 1.3 A; 1.6 A; 2.4 A; 2.7 A and 3.5 A (intermediate values adjustable) Servo valve current ranges available!
Digital output	1 output, Uout @ 10 mA load = USupply – 6 V; output = 0 V in case of error! (ERROR / COMPARATOR funcion combined)
Status signals	1 multi color „STATUS“ LED at front. Run/OK = green; Enable = yellow; Error = red
Interface 1	USB-C at front
Interface 2 (for versions with option CANopen only)	CANopen (CiA 408 or Device Profile Fluid Power); connection to DMA using standard CAN frames according to ISO 11898-1…3 and ISO 11898-5
PWM frequency	22.2 kHz - independant from dither frequency (customer specific frequencies available)
Dither frequency range	1 ... 300 Hz - independant from PWM frequency (other frequency range on request)
Cycle times	General and closed loop 1: 0.1 msec

*1: details on request

Remark:

all values nominal if not stated otherwise!

Table 4: Properties

4.2 Model code

D M A - 2 2 (A) - 0 1 - 2 7 0 - PN - 4 M S T B U - S 0

Digital
Module
Amplifier

Module Version
22(A) = DMA-22(A)
(A) = new advanced version

Operation Mode / Version
01 = 1 valve with 2 solenoids
02 .. 11 .....

Solenoid Systems Standand High Current Versions
080 = 800 mA; 110 = 1100 mA; 130 = 1300 mA;
160 = 1600 mA; 240 = 2400 mA; 270 = 2700 mA;
350 = 3500 mA

Solenoid Systems Special Low Current Servo Valve Versions
only aplicable for units in operation mode 1!
1) S73.xx: 020 = 200; 030 = 300; 050 = 500; 055 = 550 mA
2) S74.xx: 002 = 20; 003 = 30; 005 = 50; 007 = 75; 010 = 100;
0150 = 150; 020 = 200 mA

Bus Interface (for single module versions only!)
PBDP = PROFIBUS DP; PN = PROFINET
EIP = ETHERNET/IP; CO = CANopen
Other bus interfaces on request

Connection type Phoenix Contact
0 = without mating connectors
4MSTBU = incl. set of connectors, (4 pcs); version: MSTBT 2,5/4-ST BU (blue)
4FKCT = incl. set of connectors, (4 pcs); version: FKCT 2,5/4-ST (green)

Special Options
SOnOff = version for on/off valves
S10 Vref = with 10 V reference output (e.g. for joy-stick)
SANAout = analog output (0 .... +- 10 V)
SCC = Conformal Coating
SHAWE = special parameter set for HAWE valves with "twin" solenoid
SHPR = current range optimized for HAWE valves with "twin" solenoid
(current selection: 150 mA, 240 mA, 500 mA, 630 mA, 800 mA
S7310 = servo valve version: 200 mA up to max 550 mA
S7410 = servo valve version: 20 mA up to max 200 mA
Combinations possible! Other on request

Ordering code examples:

Version for one valve with 2.7 A solenoid; operation in mode 1, including connectors

DMA-22(A)-01-270-4MSTBU-S0

Version with PROFINET for two valves and 0.8 A solenoids; operation in mode 2, including connectors

DMA-22(A)-02-080-PN-4MSTBU-S0

4.3 Features of the device

- Meets the standard IEC 61158 and IEC 61784.
- Meets PNO standard Version V2.2
- LAN 10/100Base-T(X)
- 2 x RJ-45 LAN (Daisy Chain)
- Cycling data exchange RT and IRT with an PROFINET IO-Controller
- Sending and receiving of diagnostic- and process alarms.
- I&M0...4-data available
- Supporting of PROFINET Naming (device name) and TCP/IP addressing
- Shared Device supported
- Media Redundancy Protocol (MRP) supported

4.4 Used GSDML File

„GSDML-V2.3-HCS-DMA-yyyymmdd.xml “
“GSDML-01F0-0002-DMA1.bmp”

4.5 Programming PC Interfaces

Onboard USB interface in cooperation with HCSTool or HyperTerminal.

4.6 Connector definition

Options are only possible by hardware changes!
The possibility of some options is depending on the combination of all needed options.

4.6.1 Connector position layout

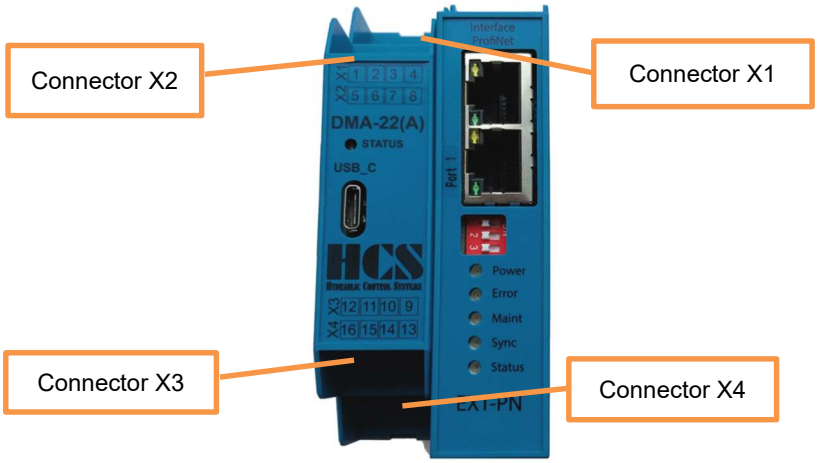

4.7 Mode 1,2 possible connector options (other on customer request)

Usage	Mode 1	Mode 2	Option	Connector	PIN
Solenoid	Output A-	Output A-	-	X1	1/1
	Output A+	Output A+	-		2/2
	Output B-	Output B-	-		3/3
	Output B+	Output B+	-		4/4
set value	Set value S1.01	Set value S1.01	-	X2	1/5
	Set value S1.02	Set value S2.01	-		2/6
	Set value S1.03	Analog set value S1.05-	-		3/7
	Set value S1.04	Analog set value S1.05+	-		4/8
Analog set value, Error, Enable	Enable Input	Enable Input	-	X3	1/9
	\Error/Comp. Output	\Error/Comp. Output	-		2/10
	Analog set value S1.06+	Analog set value S1.06+	-		3/11
	Analog set value S1.06-	Analog set value S1.06-	-		4/12
Power	-	-	Analog Output-	X4	1/13
	-	-	Analog GND		2/14
	Power 0V	Power 0V	-		3/15
	Power 24V	Power 24V	-		4/16

Table 5: Connection definition, mode 1,2

4.7.1 Mode 3,4,5,6,8,10,11 possible connector options (other on customer request)

Usage	Standard	Option mode 10,11	Option mode 5 +10V Ref	Connector	PIN
Solenoid	Output A-	-	-	X1	1/1
	Output A+	-	-		2/2
	Output B-	-	-		3/3
	Output B+	-	-		4/4
Set value, Analog feedback 1	S1.01	-	Analog GND	X2	1/5
	S1.02 / S2.01	-	+10V ref		2/6
	FB1 -	-	-		3/7
	FB1 +	-	-		4/8
Analog set value, Analog feedback 2, Error, Enable	Enable Input	-	-	X3	1/9
	\Error/Comp. Output	-	-		2/10
	set value S1.06+ External FB2+	-	-		3/11
	set value S1.06-External FB2 -	-	-		4/12
Power, Digital-Input	-	Analogue GND	-	X4	1/13
	-	Analog Output-	S1.02(Din_1)		2/14
	Power 0V	-	-		3/15
	Power 24V	-	-		4/16

Table 6: Connection definition, mode 3,4,5,6,8,10,11

4.8 Connection diagram

⚠ CAUTION

The connection diagram may vary due to specific hardware or software specifications. The corresponding connection diagram for the hardware you are using is always printed on the side of the DMA module.

Please always follow the connection plan printed on the module.

4.8.1 Mode 1

Example for the standard connection:

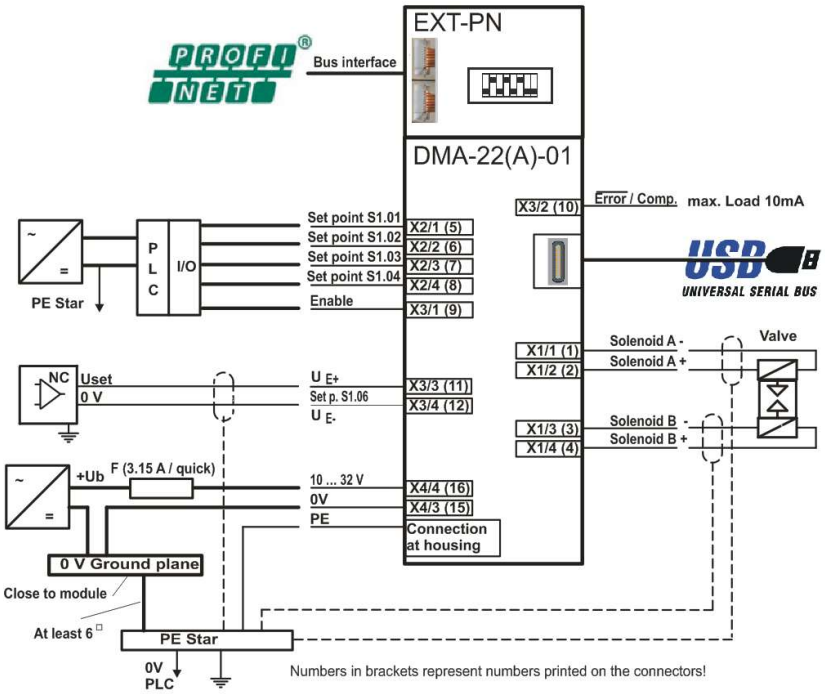

Figure 1 : Connection diagram mode 1

4.8.2 Mode 2

Example for the standard connection:

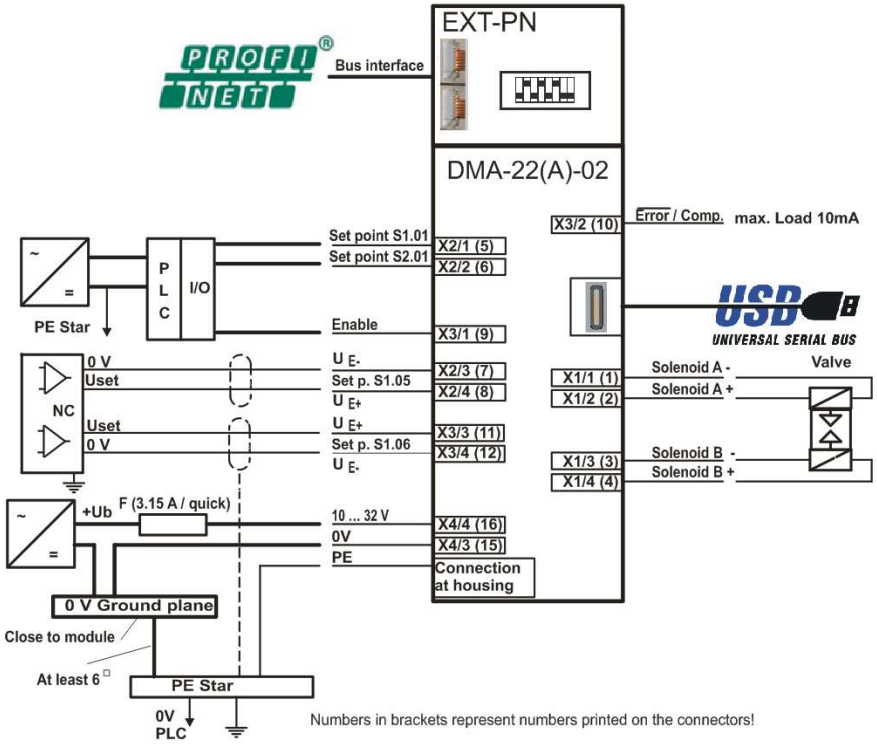

Figure 2 : Connection diagram mode 2

4.8.3 Mode 3, 4 – SW V 72.xx Servo valve

Example for the standard connection:

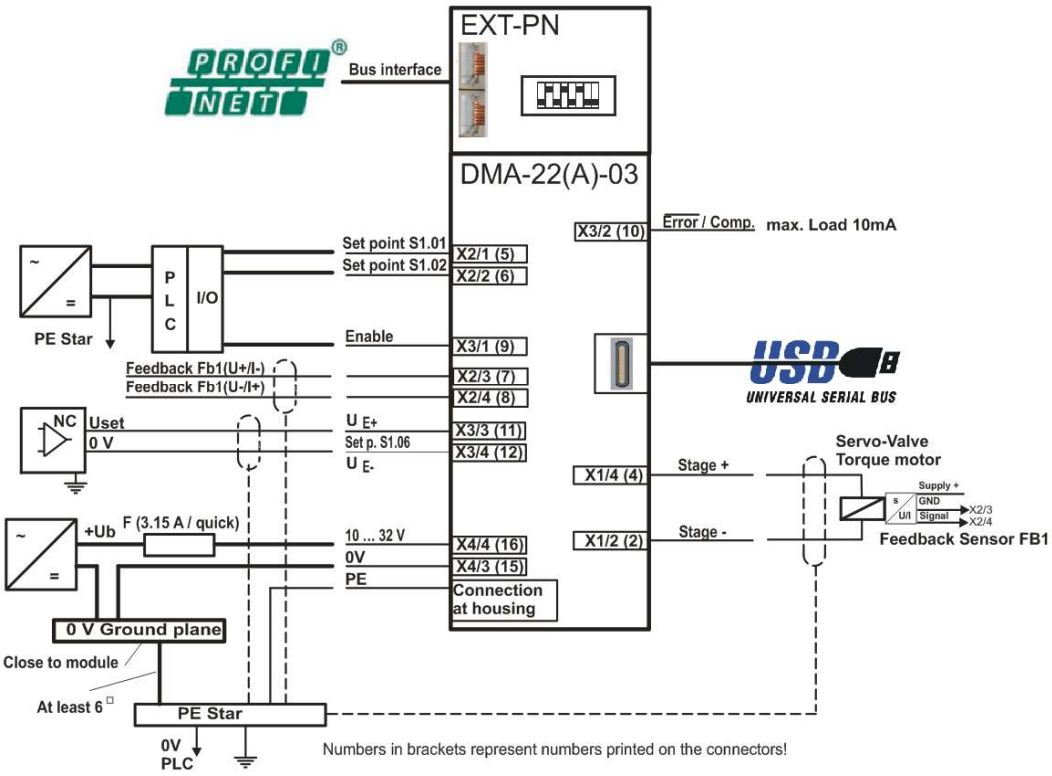

Figure 3 : Connection diagram mode 3,4 servo valve

4.8.4 Mode 3, 4

Example for the standard connection:

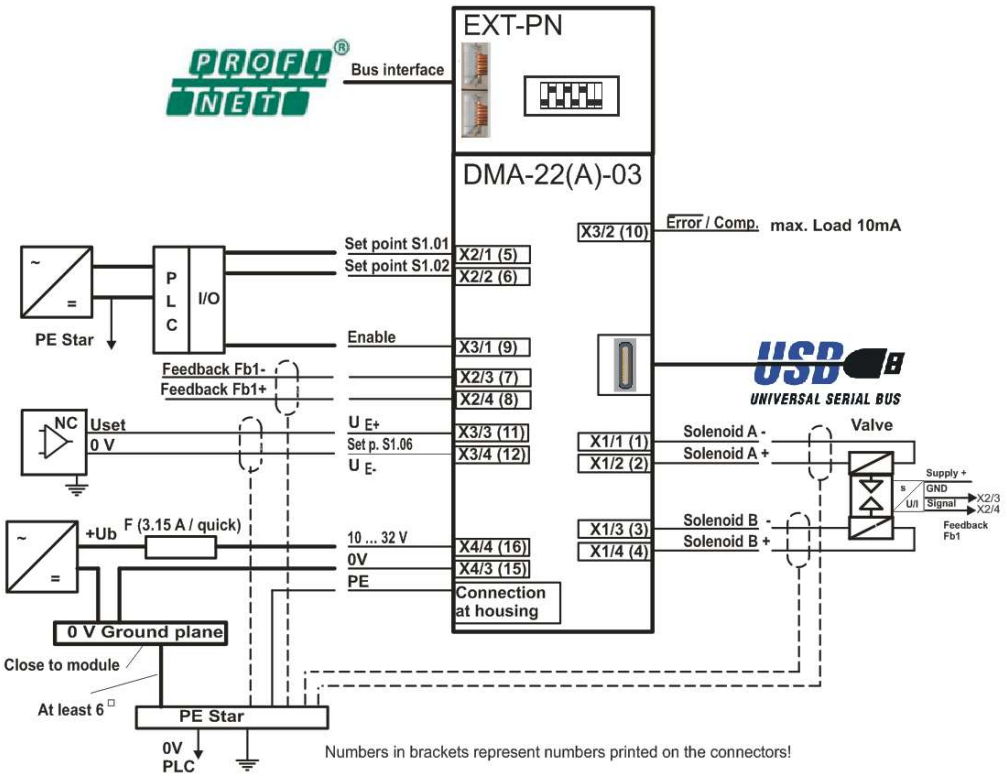

Figure 4 : Connection diagram mode 3,4 w.o. analog output

Example for the connection with analog output:

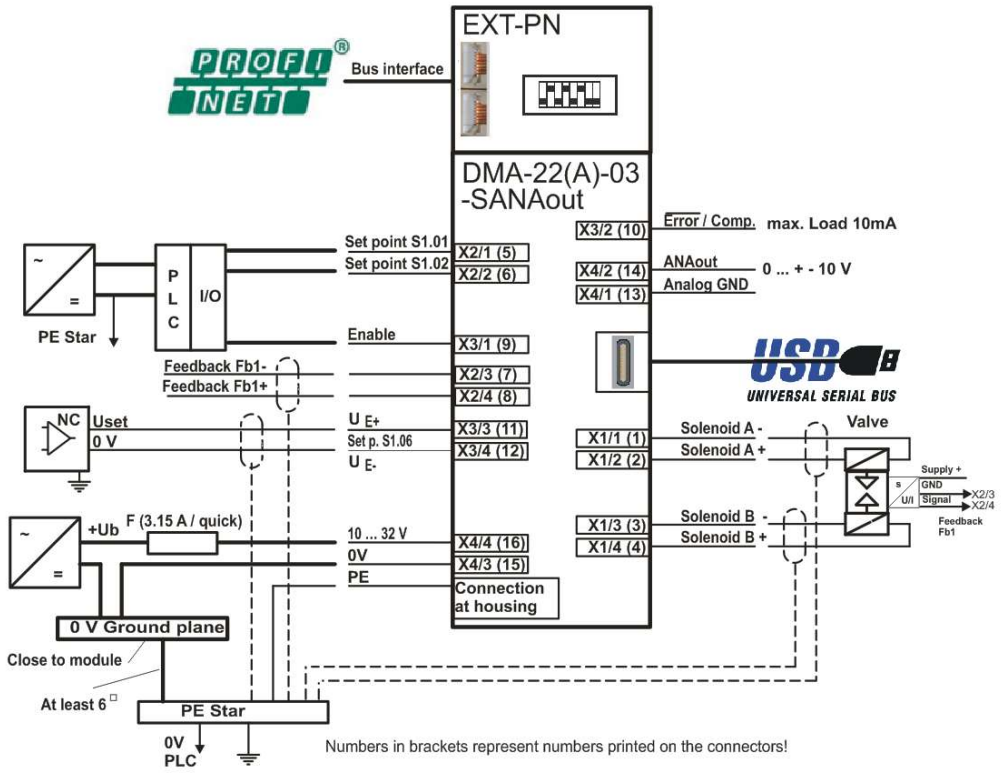

Figure 5 : Connection diagram mode 3,4 with analog output

4.8.5 Mode 5

Example for the standard connection with 10V reference output:

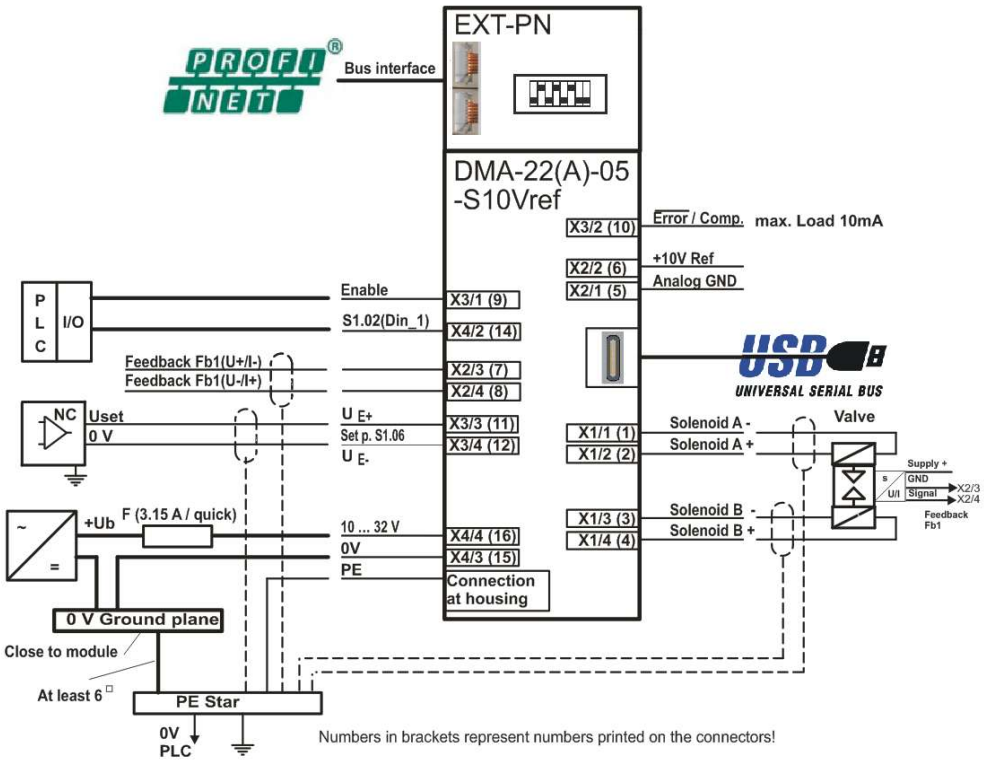

Figure 6 : Connection diagram mode 5 with 10V ref.

4.8.6 Mode 6

Example for the standard connection:

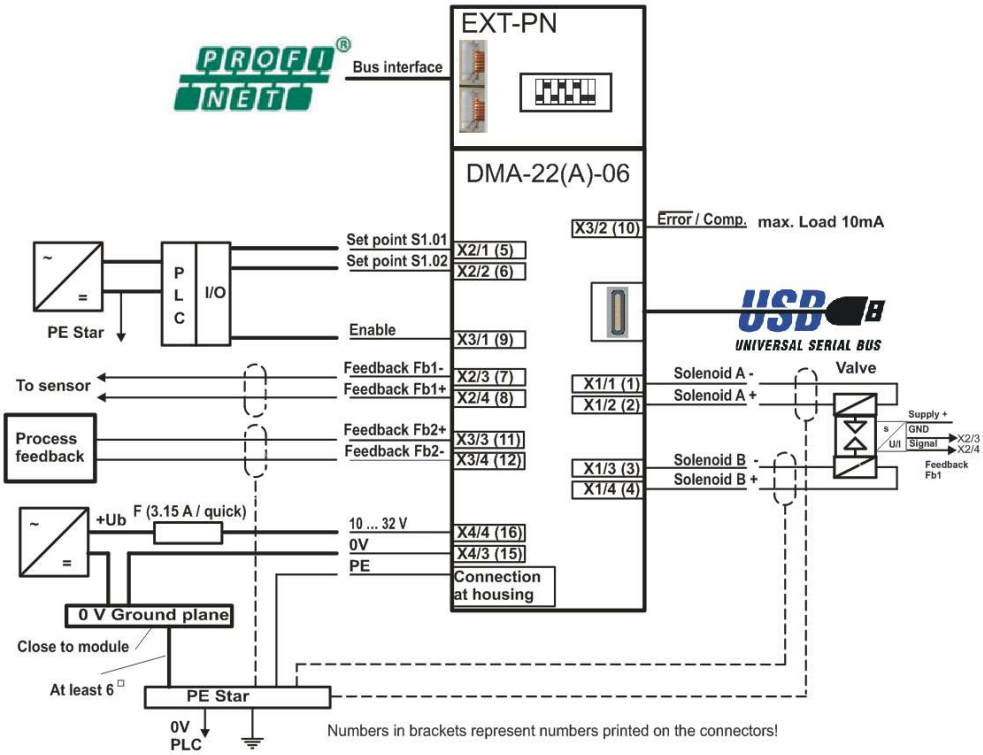

Figure 7 : Connection diagram mode 6

4.8.7 Mode 8

Example for the standard connection:

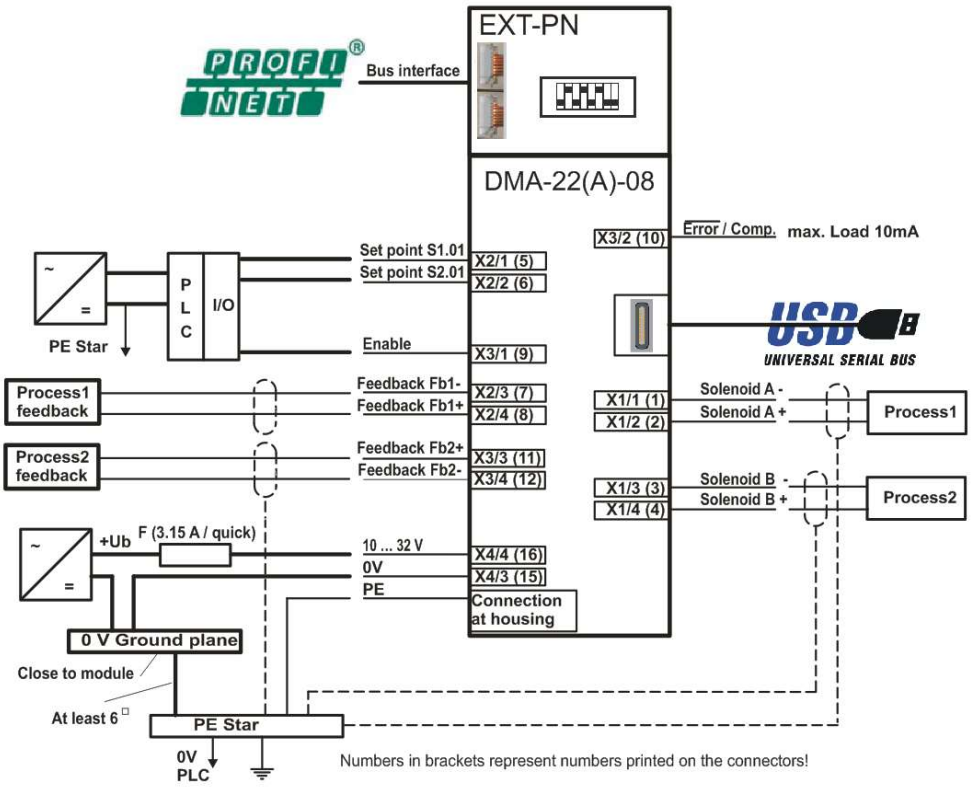

Figure 8 : Connection diagram mode 8

4.8.8 Mode 10

Example for the connection with Analog output:

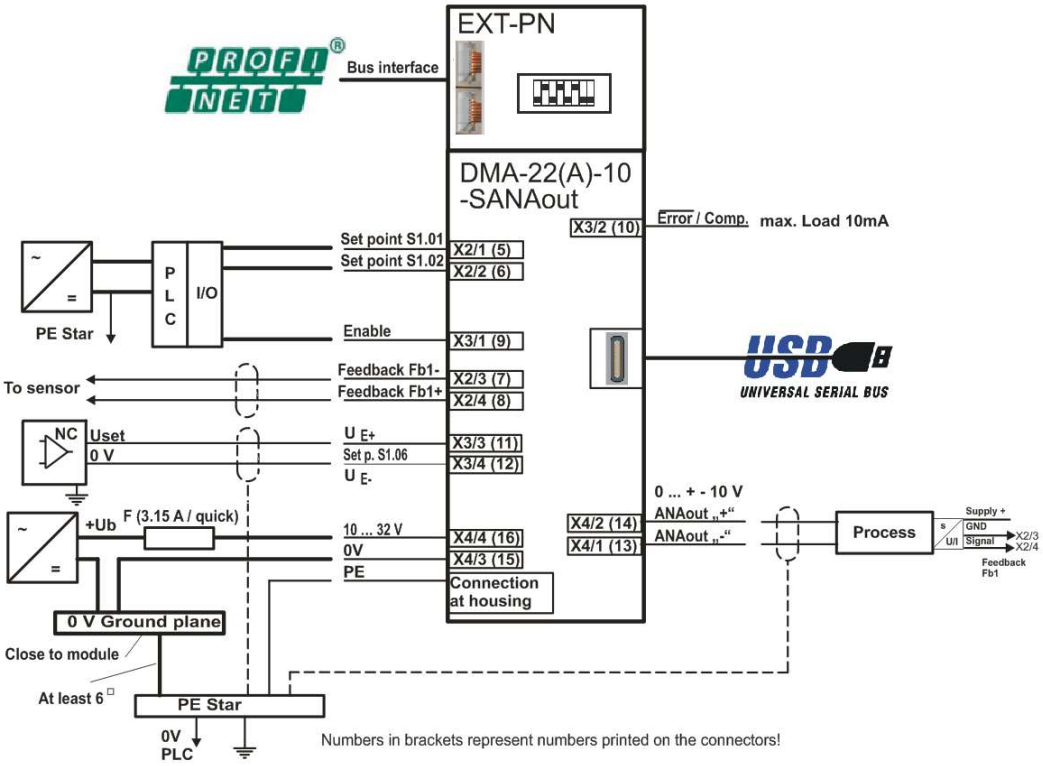

Figure 9 : Connection diagram mode 10

4.8.9 Mode 11

Example for the connection with Analog output:

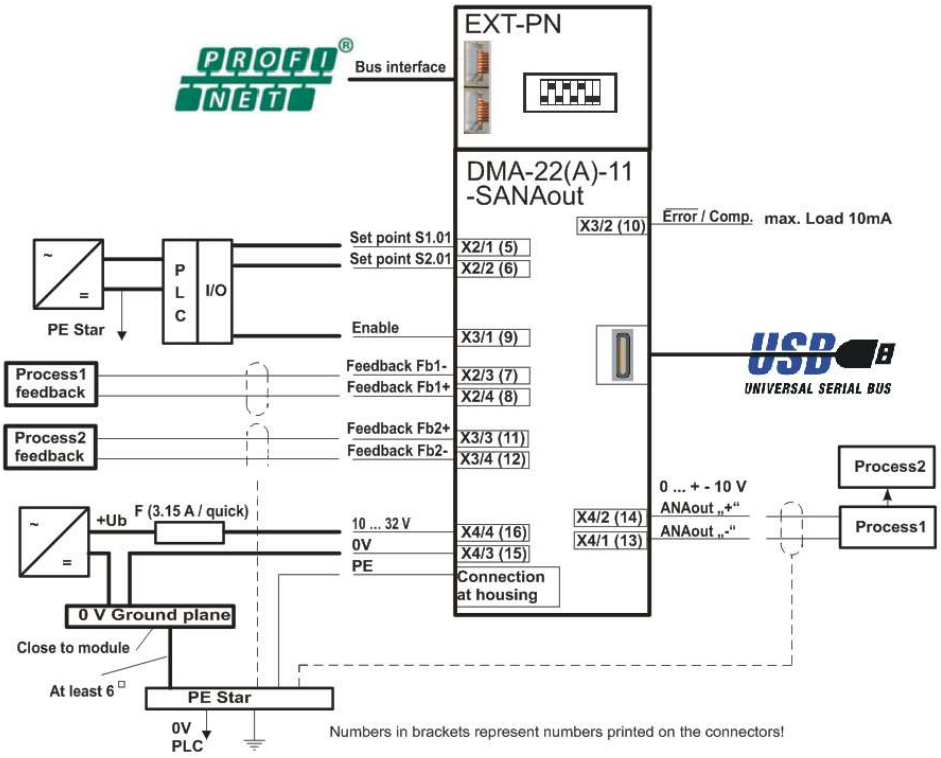

Figure 10 : Connection diagram mode 11

4.9 Device controller structure

4.9.1 Block diagram

Numbers in brackets do indicate the numbers printed on the connectors X1..X4

Not all predefined parameters are available in all control modes. Please make sure in the parameter overview which parameters are valid for which mode.

4.9.1.1 Option “analog output” -SANAout

If the option -SANAout is defined, the analog Output is active

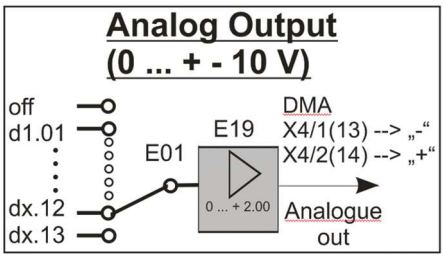

Figure 11: Option: analog output

4.9.1.2 Mode 1, Open loop, 1 valve

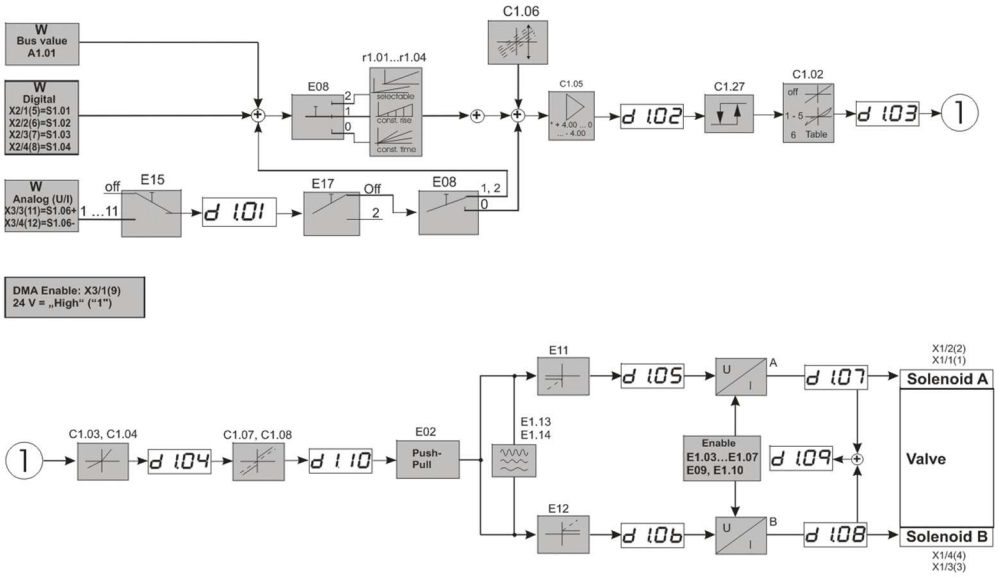

Figure 12: Block diagram mode 1

4.9.1.3 Mode 2, Open loop, 2 valves

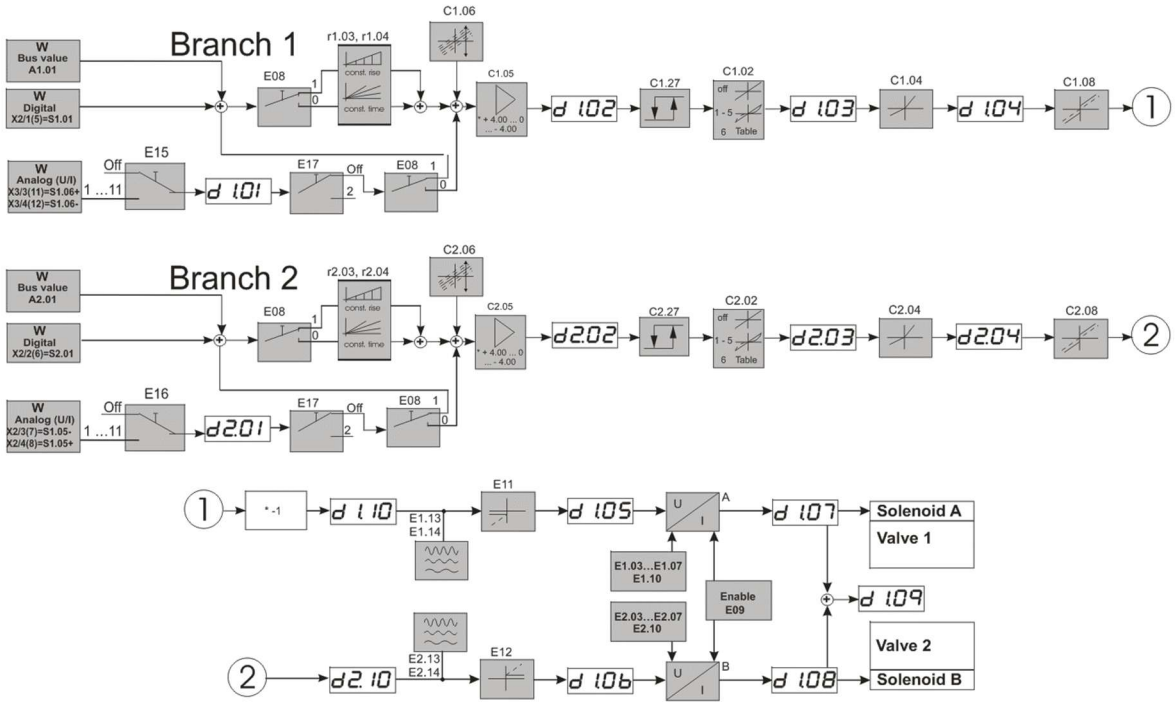

Figure 13: Block diagram mode 2

4.9.1.4 Mode 3 Closed loop, 1 valve

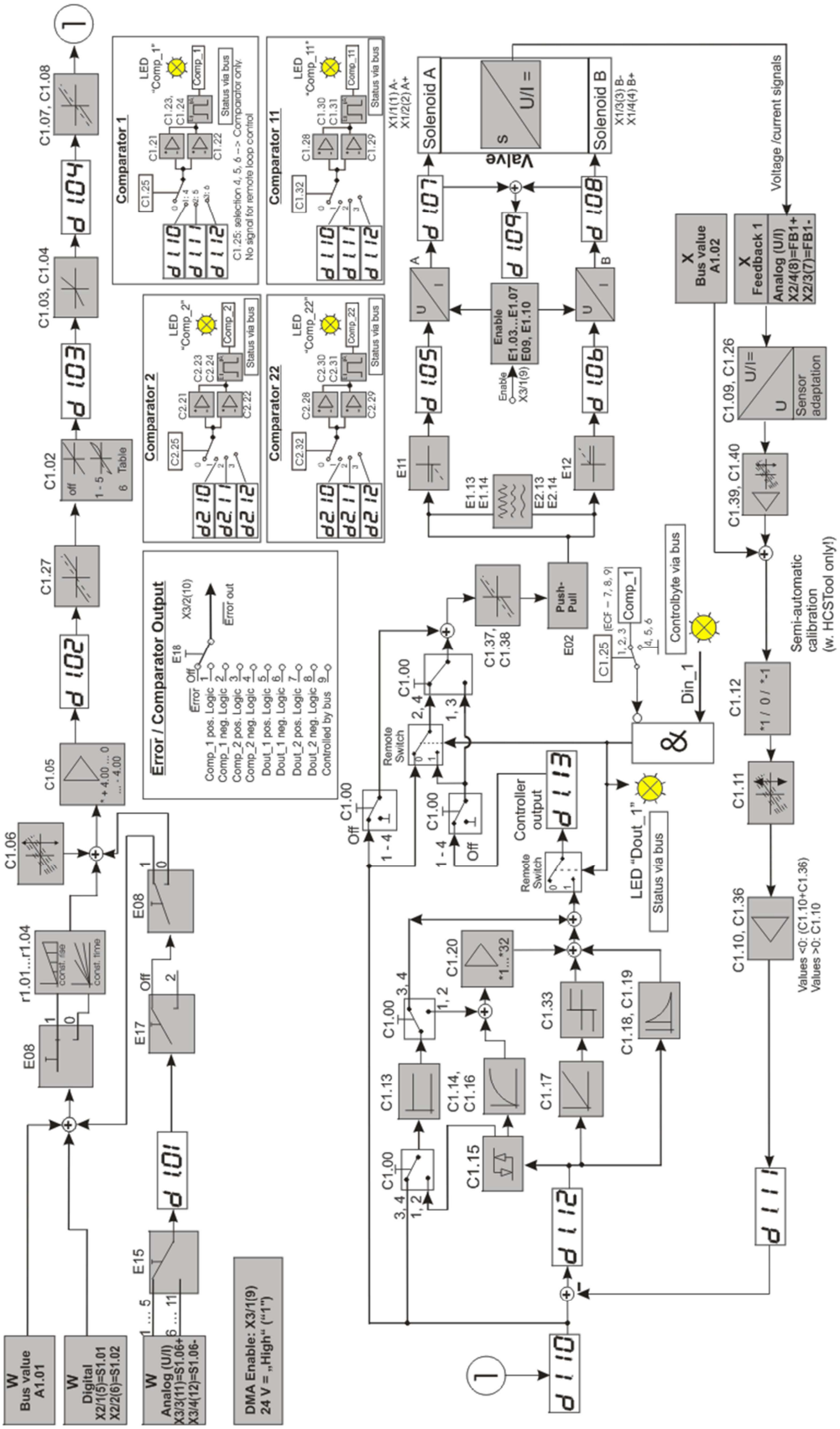

Figure 14: Block diagram mode 3

4.9.1.5 Mode 3 -SServo Closed loop, 1 valve

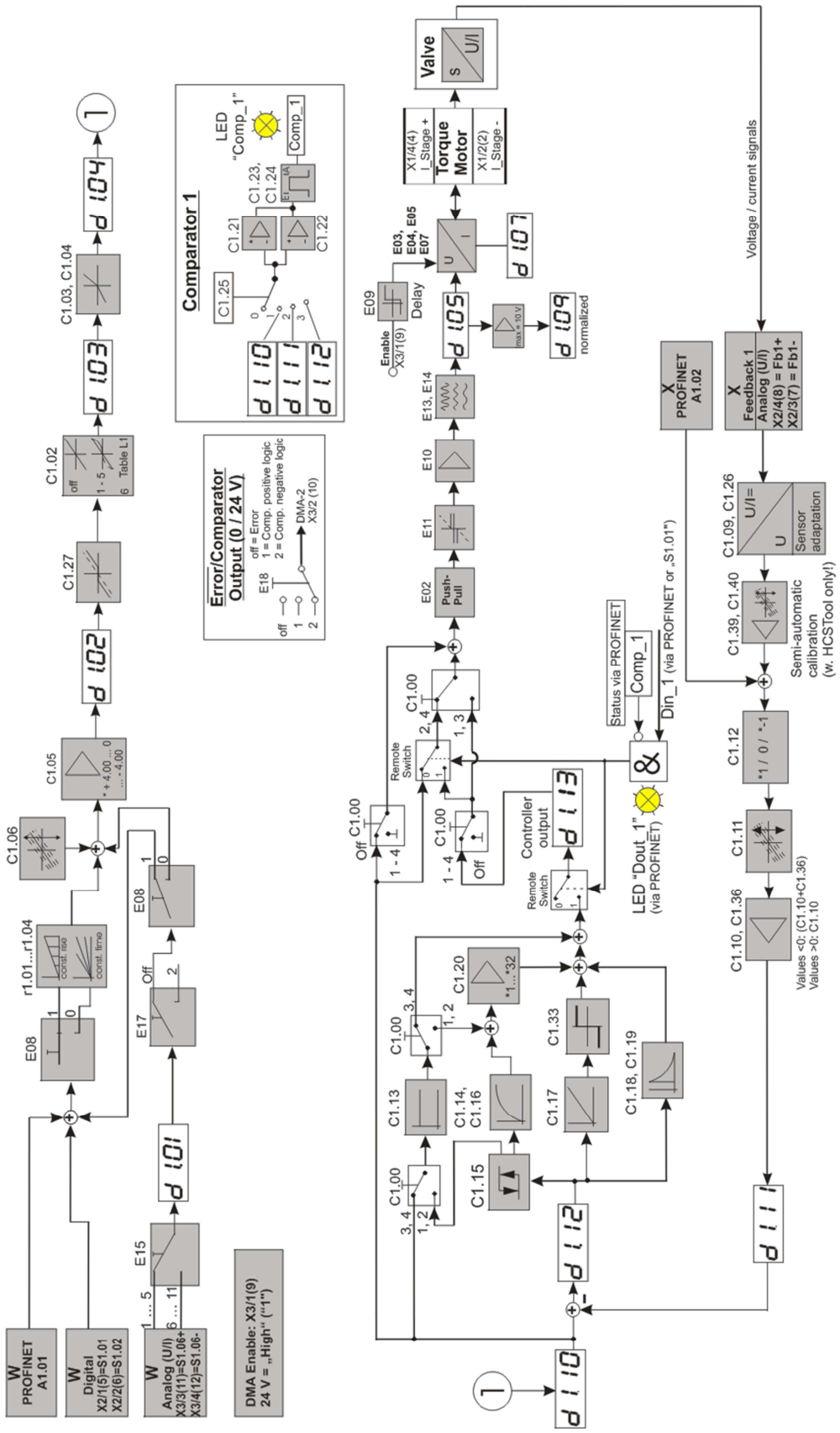

Figure 15: Block diagram mode 3 with servo valve

4.9.1.6 Mode 4, Closed loop, 1 process

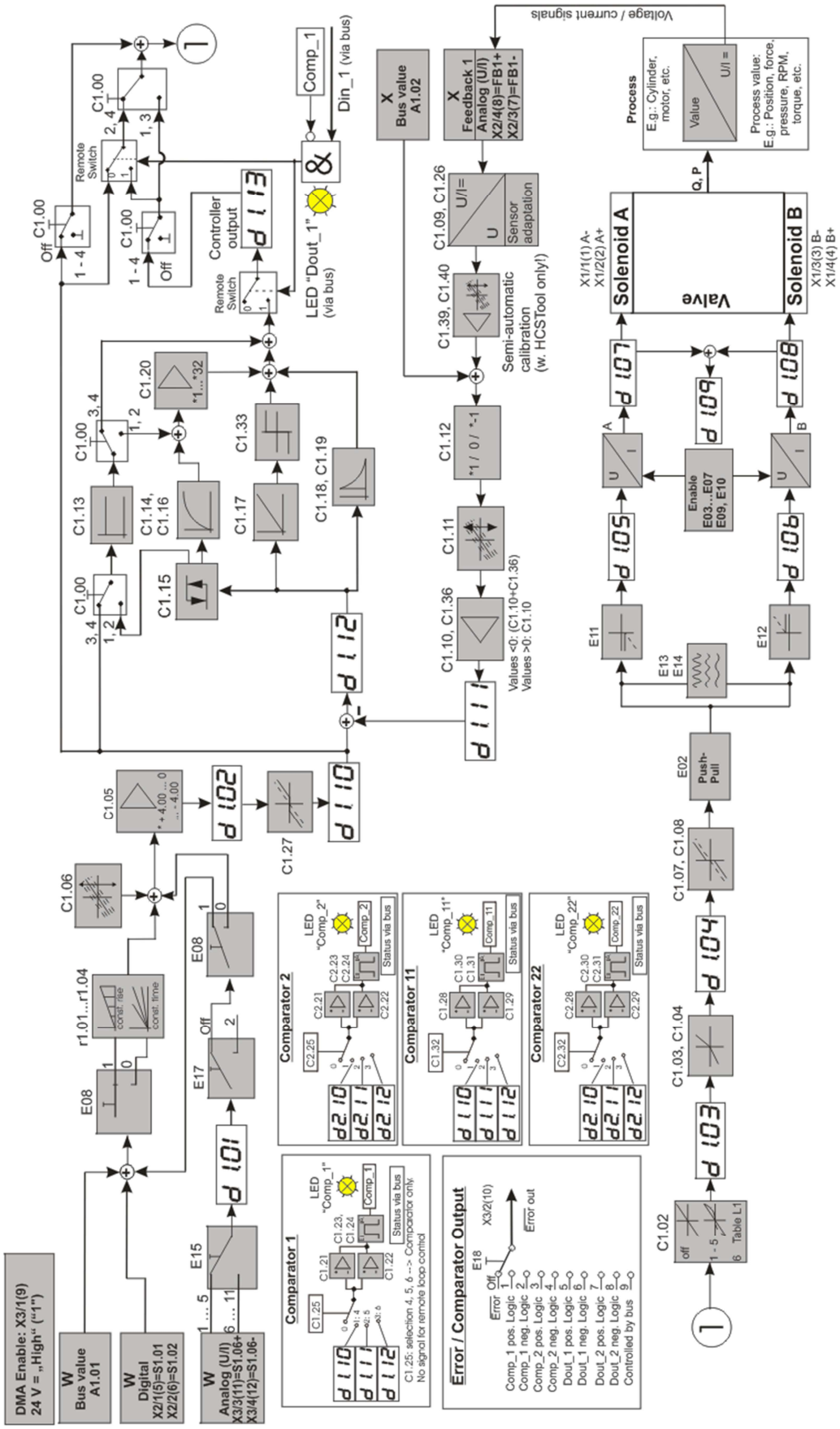

Figure 16: Block diagram mode 4

4.9.1.7 Mode 4 -SServo, Closed loop, 1 process

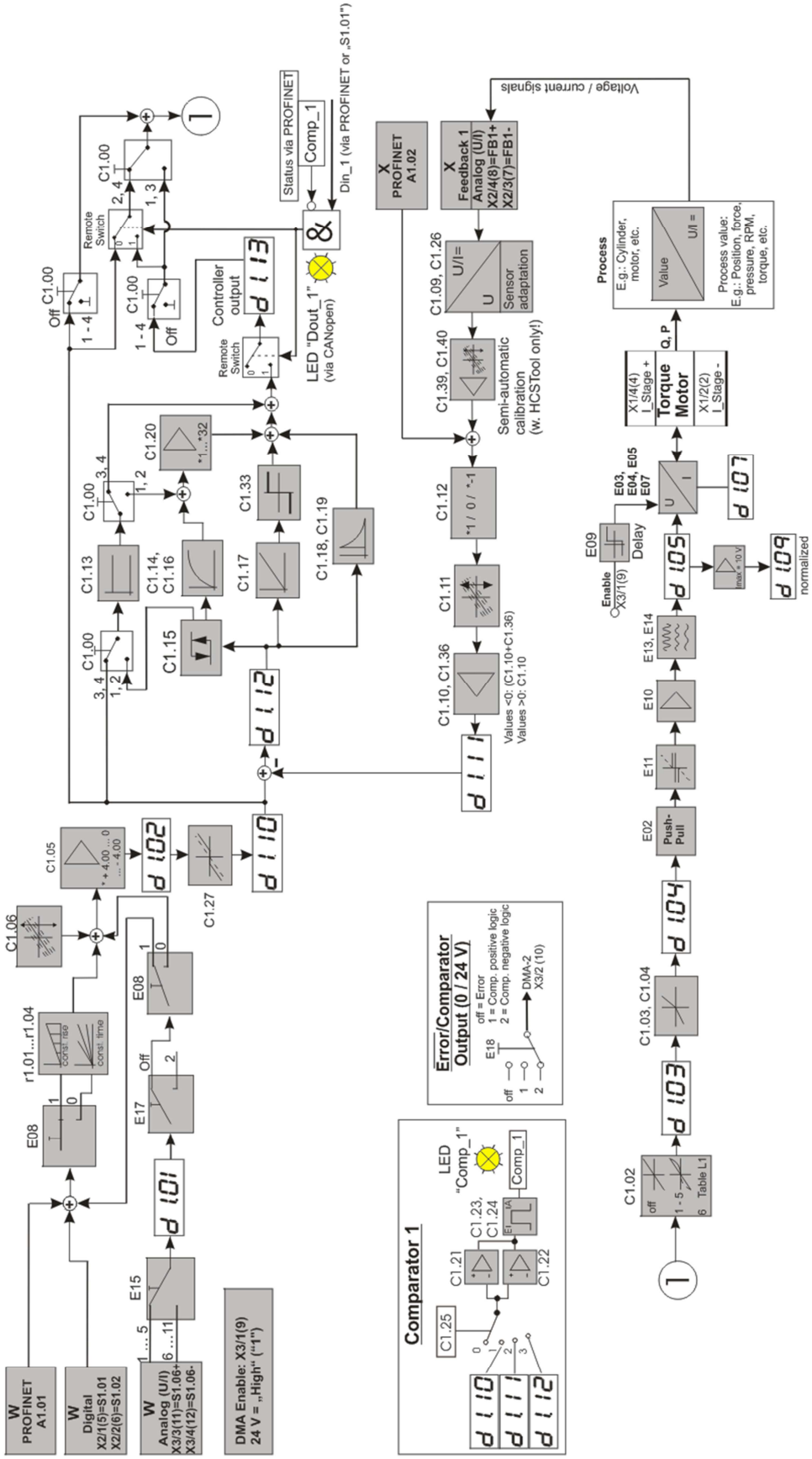

Figure 17: Block diagram mode 4 with servo valve

4.9.1.8 Mode 5, Closed loop, 1 process

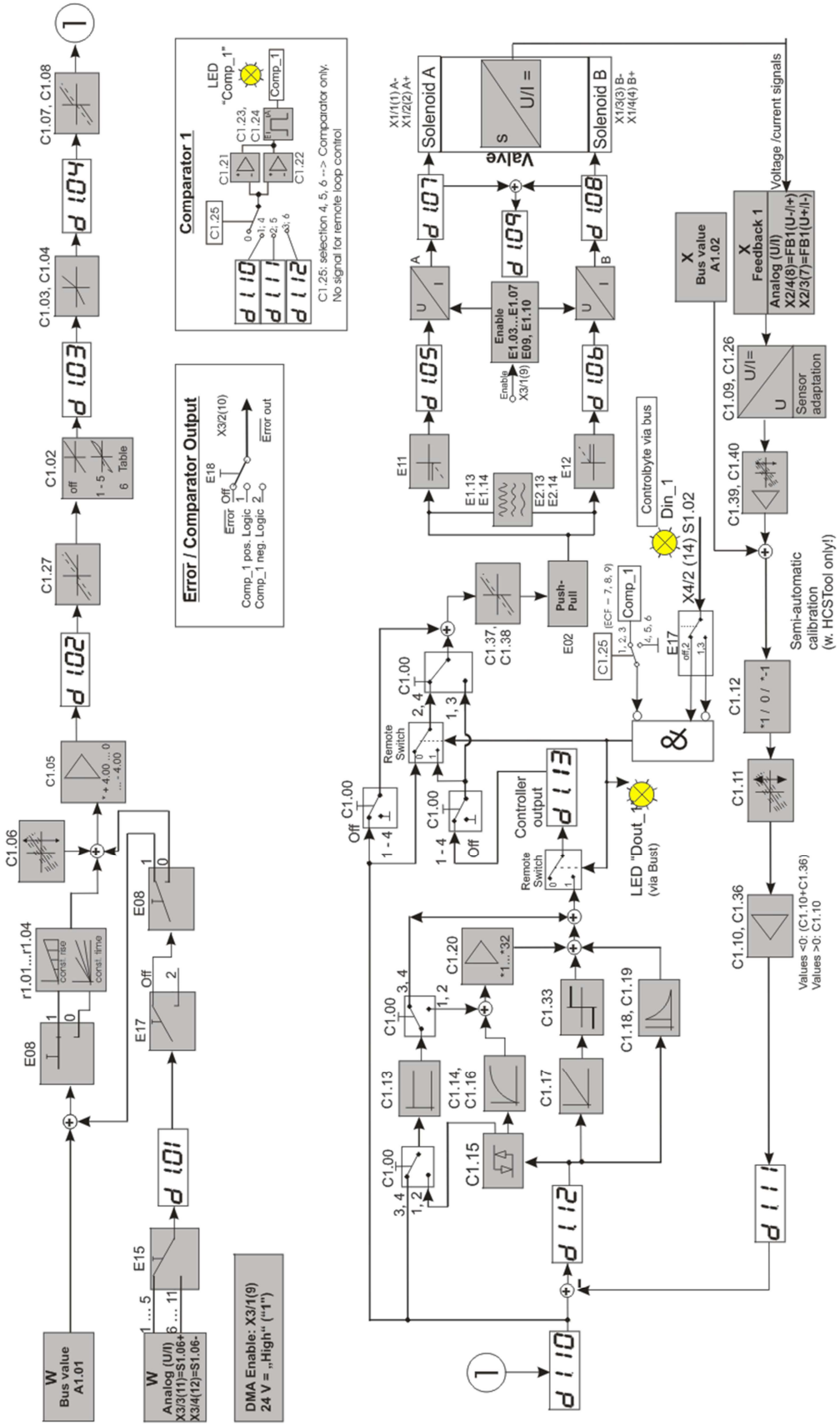

Figure 18: Block diagram mode 5

4.9.1.9 Mode 6, Closed loop, 1 valve, 1 process

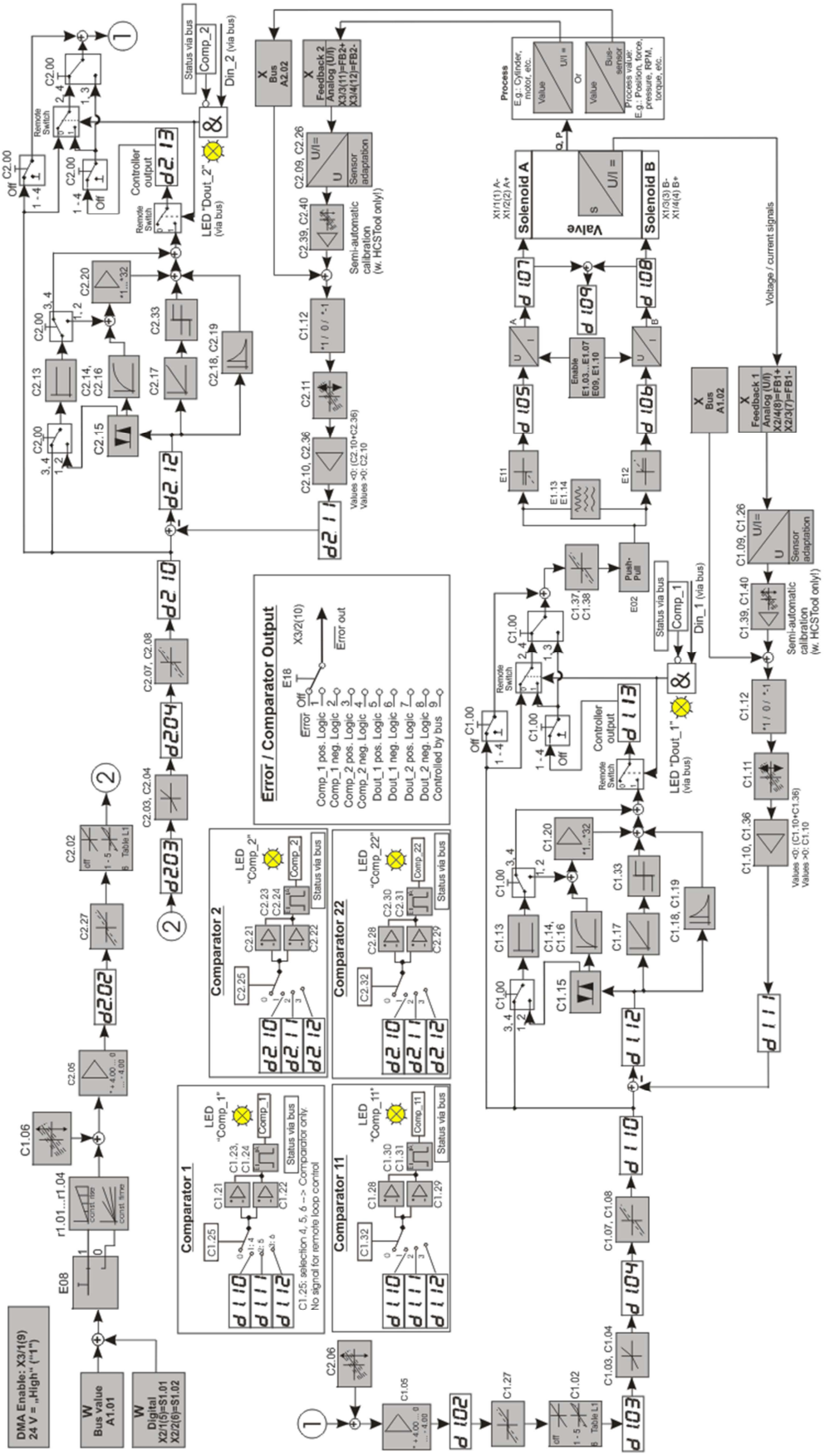

Figure 19: Block diagram mode 6

4.9.1.10 Mode 8, Closed loop, 2 processes

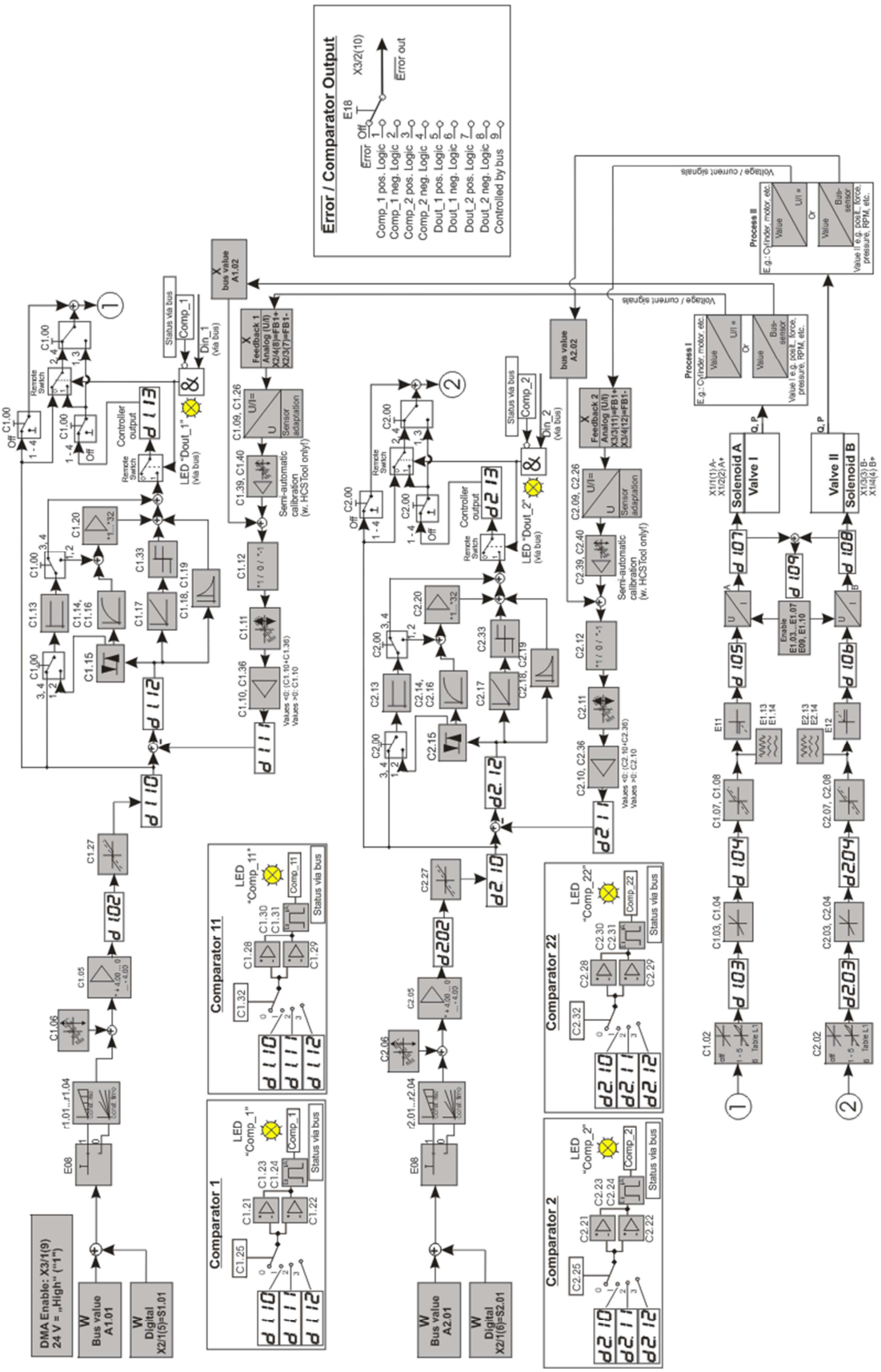

Figure 20: Block diagram mode 8

4.9.1.11 Mode 10 -SANAout, single closed loop – no valve

Hardware option “Analog out” is needed!

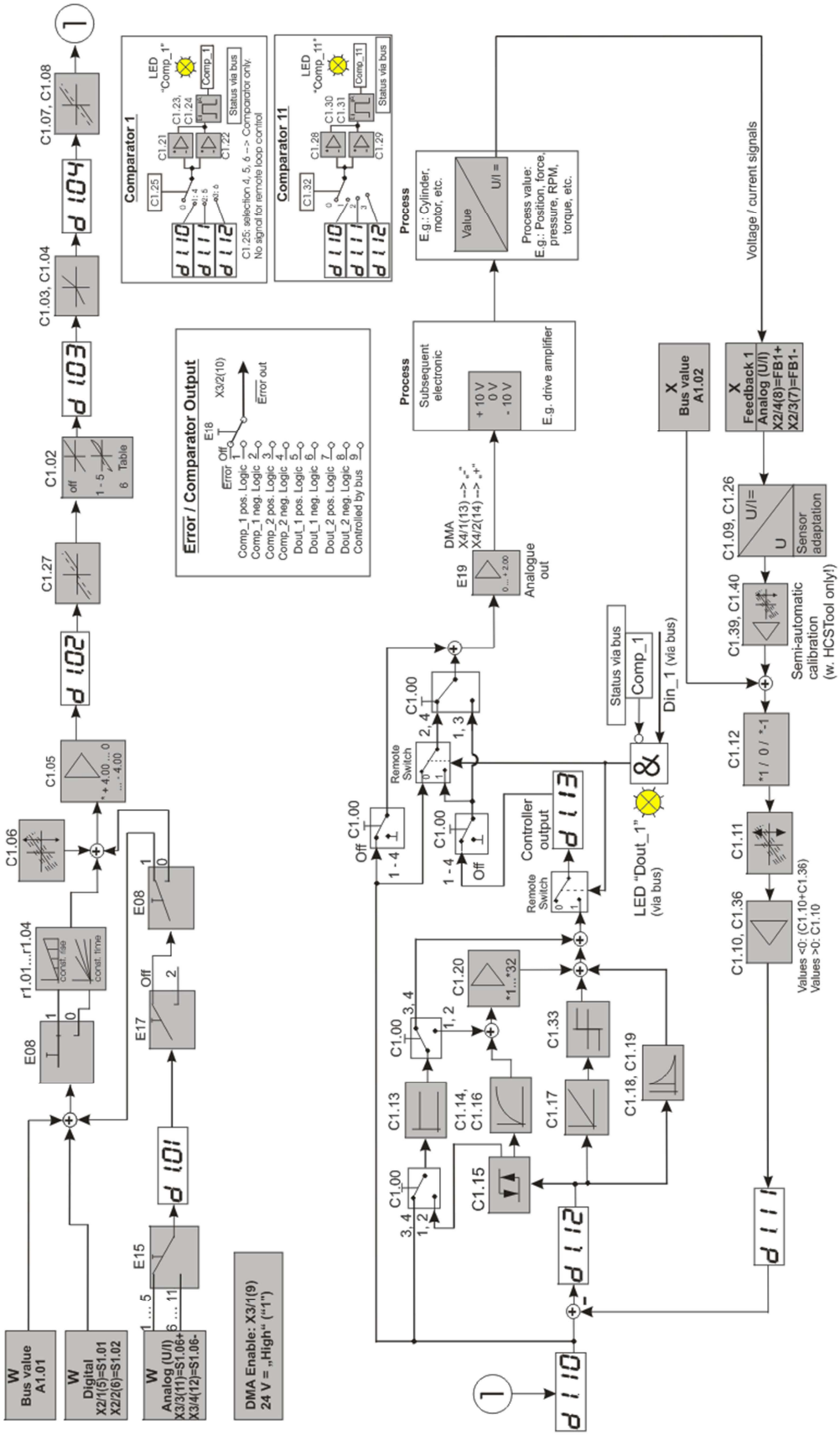

Figure 21: Block diagram mode 10

4.9.1.12 Mode 11 -SANAout, double closed loop – no valve

Hardware option “Analog out” is needed!

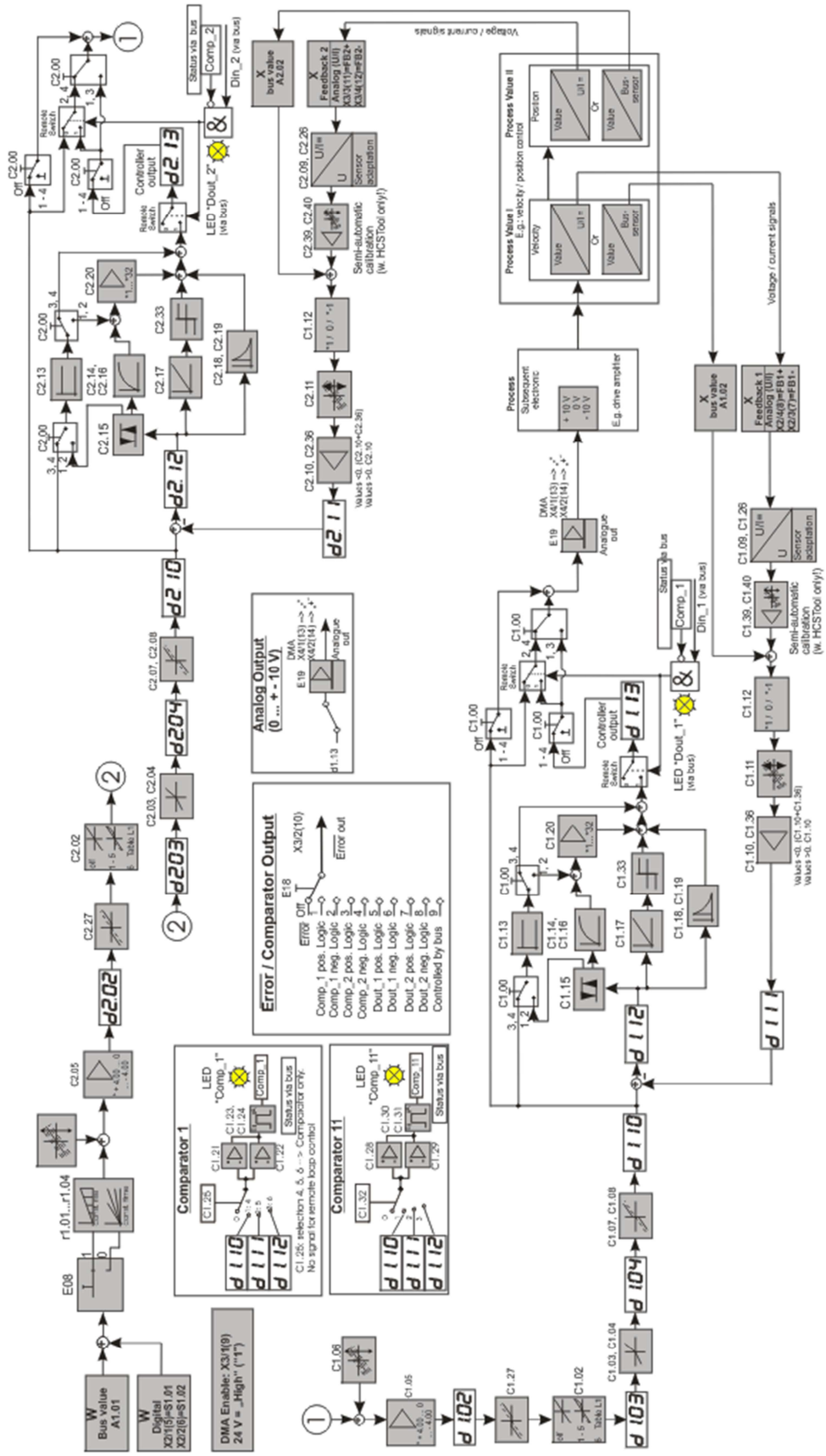

Figure 22: Block diagram mode 11

4.10 Inputs

Digital Input, normally used as enable signal.
For more information see □ Chapter „7.6 Digital inputs“, page 51

4.11 Outputs:

- for error indication. In case of error this line is connected to ground with 1K input resistance. See □ Chapter „7.7 Digital outputs”, page 52

Options (only possible if the hardware offers the possibility)

- Internal supply output:
  Output for internal sensor or potentiometer
  10 V / 10 mA, current limited. (Output voltage defined by hardware revision)
- Analog voltage output:
  Output for checking the internal control loop values. Output for control an external controller.
  +-10 V / 6 mA

4.12 Front View: address selection and connectors

4.12.1 Single module Version (node with one module connected)

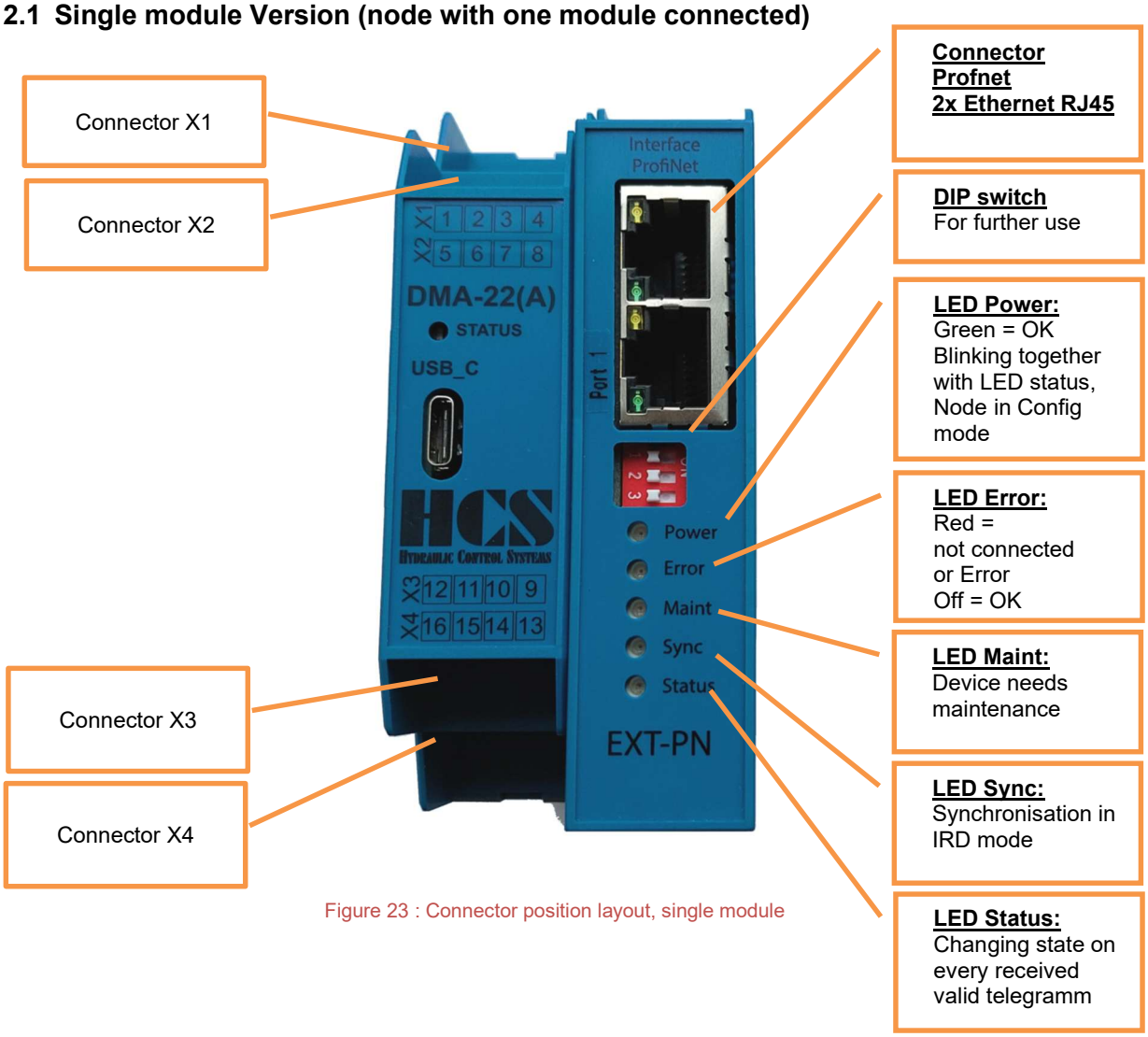

Figure 23 : Connector position layout, single module

4.12.2 Multiple module Version (node with multiple modules connected)

Example:
1 Profinet-Node and 3 DMA-22(A) Modules (Slaves) connected

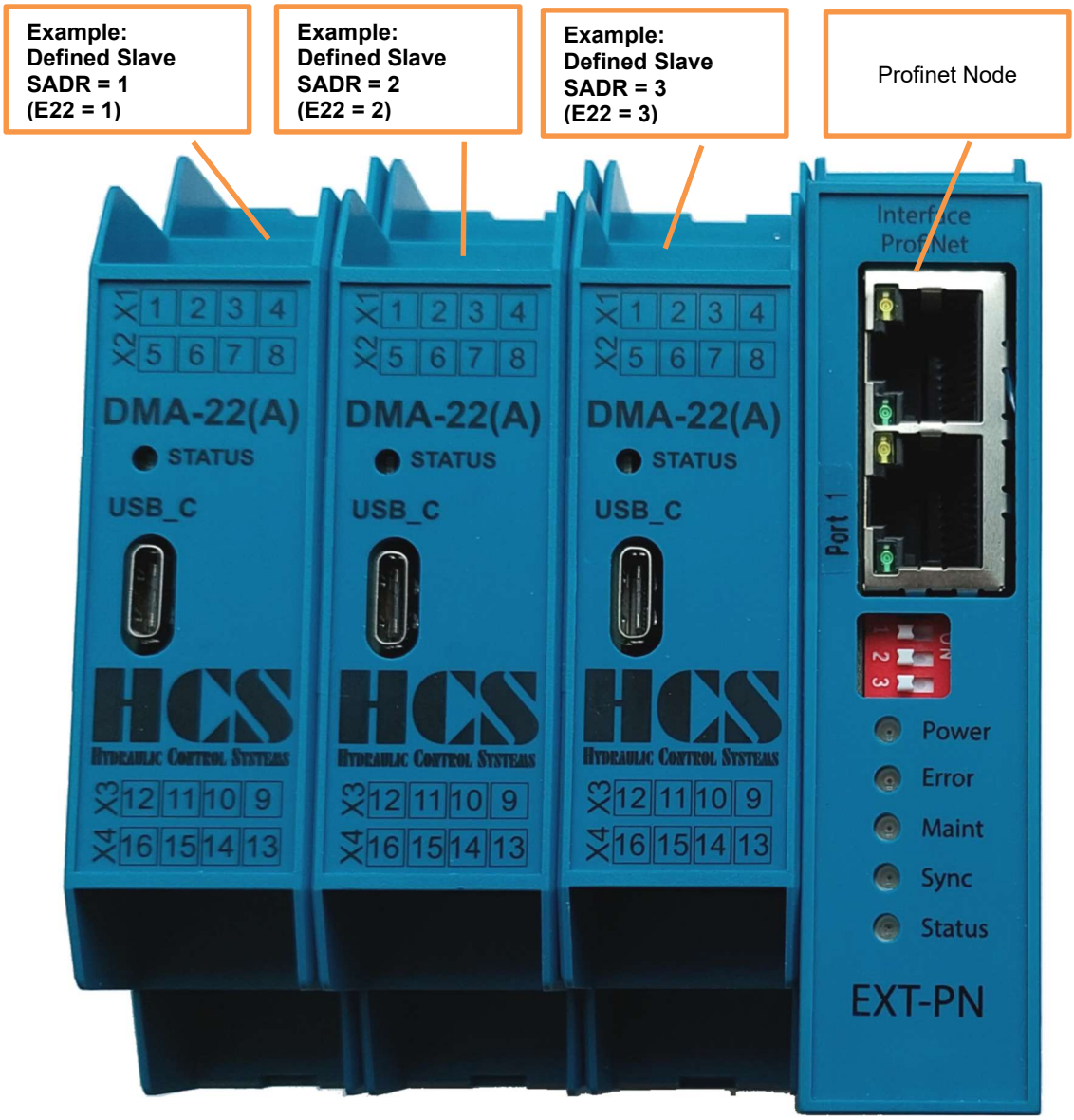

Figure 24 : Connector position layout, single module

5 General communication information

5.1 Special information for Multi-Slave Nodes

In cases where a Profinet node has more than one slave (modules) connected all slaves must be active (connected to the power supply). The hardware enable is connected to all of the DMA modules. Otherwise communication is not possible and the node-module will respond with a timeout error message.
The Profinet-Node connected to the PLC (Error LED is off).
If 3 modules are used then E22 must be set to „1“ for the first module on the left, to „2“ for the second module in the middle and to „3“ for the third module closest to the slave.

5.2 General information about TADR (Telegram Address)

TADR is a value which may be written (changed) with each cycle but changing of this value is optional and not mandatory. The value will be defined by the Profinet-Master.
The purpose is to either check the telegrams by the master or also in order to force sending of a new telegram from the node.
The design of the node is made in a way that the slave or slaves (module or modules in case of multi-slave version) are only responding if a received message from the master contains changed (different) data compared to the previous message.
So TADR can be used to force a response from a slave for example in order to get an update on the current status of the slave even if the other data in the message remain unchanged.
TADR value is valid in the range of 0 to 255 or in hexadecimal 0x00 to 0xFF.

5.3 General information about CMD (Command) and SADR (Slave Address)

Different ways of communication between master and slaves (modules) are possible. The difference is in the CMD instruction.

CMD = 6: Writing of a single parameter-ID of a slave (module) at a node. The selected SADR in the telegram will define which slave is selected for the communication. In the slave itself the address is set by parameter E22,
Special case: the Profinet node has only one slave (module) connected. In this case SADR is set to 1 (defined in parameter E22). SADR also could be set to any value between 1 and 32.
Theoretically up to 32 slaves (modules) can be connected to one of the Profinet nodes. Which of the slaves (modules) is selected for communication is again defined in the telegram by the SADR and in the slaves (modules) by setting of parameters E22. For more information please refer to □ Chapter „6.3.1 CMD = 6, Master Write single parameter (7 bytes) ", page 36

CMD = 3: Reading of one or more parameters with parameter-ID in rising order. All other definitions from CMD = 6 are also applicable. For more information please refer to □ Chapter „6.1.1 CMD = 3, Master Read parameters (7 bytes)", page 34

CMD = 15: This instruction allows writing or reading of a (pre-defined) set of parameters. The set of parameters itself is depending on the software version of the slaves (modules); refer also to □ Chapter „7.5 CMD = 15, structure of Profinet telegram definition, depending on SW Versions", page 43
With this instruction all slaves (modules) at a given node with the SADR from 1 to 5 can be reached. This instruction cannot be used for slaves (modules) with a SADR > 5. In this case CMD = 3 and CMD = 6 must be used!
The best is to set SADR at the slaves in rising and consecutive order beginning with SADR =1 (E22 = 1).
In the telegram itself the number of slaves (modules) at the node is defined by SNUM. This at the same time, will also define the length of the telegram (number of bytes in the telegram).
For more information please to □ Chapter „7 Complex commands", page 39

It is possible to „mix" the instructions CMD = 3, CMD = 6 and CM = 15 for one node.
So, for example the slaves (modules) with E22 =1, E22 = 2 and E22 = 3 are actuated by CMD =15 and/or CMD = 3 and/or CMD =6,
But another slave (module) with address E22 greater than 5 is only actuated either by CMD =3 or CMD = 6.

6 Simple commands

6.1 CMD 3 Master Read

6.1.1 CMD = 3, Master Read parameters (7 bytes)

Write first…

Byte	Abbreviation	Description
0	TADR	Telegram address, defined by the user, Range 0..255, 0..0xFF
1	SADR	Slave address
2	CMD	Command: 3 = Read multiple parameters by the master
3	IDH	High byte parameter ID of first parameter
4	IDL	Low byte parameter ID of first parameter
5	N-high	High-Byte Number parameters
6	N-low	Low-Byte Number parameters

…Write last

TADR Telegram address, defined by the Profinet-Master.(Set by the User)

SADR Slave address, if more than one Slave is connected to the Profinet port
1 = standard (single slave)
2 to 32 = also possible (E22 defines the slave address)

CMD Command: 3 = Read parameter by the master

IDH,IDL H-Byte and Low-Byte of parameter-ID in HEX
0x0000 .. 0x0109 = Valid ID-Range. Please take into account the gaps in the parameter list

N-high High-Byte Number parameters (words), normally zero

N-low Low-Byte Number parameters (words), 1 to 8 (0x08)
(maximal 8 parameters readable at once)

6.1.2 CMD = 3, Response from Slave (4 + CNT bytes)

Write first…

Byte	Abbreviation	Description
0	TADR	Telegram address, defined by the read command, Range 0..255, 0..0xFF
1	SADR	Slave address
2	CMD	Command: 3 = Read multiple parameters by the master
3	CNT	N*2, Number of data bytes
4	DAT1H	High byte value of first parameter
5	DAT1L	Low Byte value of first parameter
If CNT > 2: ……		
CNT+2 = N	DATnH	High byte value of last (n)parameter
CNT+3 = N	DATnL	Low Byte value of last (n)parameter

…Write last

TADR Telegram address, defined by the Profinet-Master. (Set by the read command)

SADR Slave address, if more than one Slave is connected to the Profinet port
1 = standard (single slave)
2 to 32 = also possible (E22 defines the slave address)

CMD Command: 3 = Read parameter by the master

CNT N*2, Number of data bytes (Maximal 16 data bytes)

IDH,IDL H-Byte and Low-Byte of parameter-ID in HEX
0x0000 .. 0x0109 = Valid ID-Range

DAT1H.. DAT nH,
DAT1L.. DAT nL, Two data bytes in HEX, without decimal sign
0x7FFF == +32767
0x8000 == -32768

6.1.3 CMD = 3, Error from Slave (4 bytes)

Write first…

Byte	Abbreviation	Description
0	TADR	Telegram address, defined by the read command, Range 0..255, 0..0xFF
1	SADR	Slave address
2	ERR	Error code
3	EXCE	Exception

…Write last

ERR Error code: 0x83 = Read failed

EXCE Exception:
1 = Command not supported
2 = Wrong ID
3 = CNT== 0 or CNT > 16 (0x10)
4 = Reading of ID failed
5 = timeout slave, address wrong or not installed or
Invalid number of connected slaves
6 = Internal checksum error (Modbus)

Example for error response:

Module 3 is not installed and **SADR** in the master telegram is set to 3

Byte	Data	Abbreviation	Description
0	0x23	TADR	Response telegram address (defined by the read command)
1	**0x03**	SADR	Actual slave address
2	0x83	ERR	Error, Bit „7“ with command 0x03 is set
3	0x05	EXCE	timeout slave, address wrong or not installed

6.2 Telegram example CMD = 3

Master wants to read parameter „d1.07”:

ID = 0x0007
N = 1, one parameter
TADR = 0x24
SADR = 0x01

Byte	Data	Abbreviation
0	0x24	TADR
1	0x01	SADR
2	0x03	CMD
3	0x00	IDH
4	0x07	IDL
5	0x00	N-high
6	0x01	N-low

Response from slave (module)
CNT = 2 (2 Bytes)
DATA = 0x0133 (==0.307Af)

Byte	Data	Abbreviation
0	0x24	TADR
1	0x01	SADR
2	0x03	CMD
3	0x02	CNT
4	0x01	DAT1H
5	0x33	DAT1L

6.3 CMD = 6, Master Write

6.3.1 CMD = 6, Master Write single parameter (7 bytes)

Write first…

Byte	Abbreviation	Description
0	TADR	Telegram address, defined by the user, Range 0..255, 0..0xFF
1	SADR	Slave address
2	CMD	Command: 6 = Write single parameter by the master
3	IDH	High byte parameter ID
4	IDL	Low byte parameter ID
5	DATH	High byte of parameter value
6	DATL	Low byte of parameter value

…Write last

TADR Telegram address, defined by the Profinet-Master.(Set by the user)

SADR Slave address, if more than one Slave is connected to the Profinet port
1 = standard (single slave)
2..32 = also possible (E22 defines the slave address)

CMD Command: 6 = Write single parameter by the master

IDH,IDL H-Byte and Low-Byte of parameter-ID in HEX
0x0000 .. 0x0109 = Valid ID-Range. Please take into account the gaps in the parameter list

DATH,DATL Two data bytes in HEX, without decimal sign
0x7FFF == +32767
0x8000 == -32768

6.3.2 CMD = 6, Response from Slave (7 bytes)

Write first…

Byte	Abbreviation	Description
0	TADR	Telegram address, defined by the write command, Range 0..255, 0..0xFF
1	SADR	Slave address
2	CMD	Command: 6 = Write single parameter by the master
3	IDH	High byte parameter ID
4	IDL	Low byte parameter ID
5	DATH	High byte of second analogue value
6	DATL	Low byte of first analogue value

…Write last

TADR Telegram address, defined by the Profinet-Master.(Set by the write command)

SADR Slave address, if more than one Slave is connected to the Profinet port
1 = standard (single slave)
2..32 = also possible (E22 defines the slave address)

CMD Command: 6 = Write single parameter by the master
IDH,IDL H-Byte and Low-Byte of parameter-ID in HEX
0x0000 .. 0x0109 Valid ID-Range

DATH,DATL Two data bytes in HEX, without decimal sign
0x7FFF == +32767
0x8000 == -32768

6.3.3 CMD = 6, Error from Slave (4 bytes)

Write first…

Byte	Abbreviation	Description
0	TADR	Telegram address, defined by the write command, Range 0..255, 0..0xFF
1	SADR	Slave address
2	ERR	Error code
3	EXCE	Exception

…Write last

ERR Error code: 0x86 = write failed

EXCE Exception:
1 = Command not supported
2 = Wrong ID
3 = Wrong Data Value
4 = Writing of ID failed
5 = timeout slave, address wrong or not installed or
Invalid number of connected slaves
6 = Internal checksum error (Modbus)

Example for error response:

Module 3 is not installed and **SADR** in the master telegram is set to 3

Byte	Data	Abbreviation	Description
0	0x23	TADR	Response telegram address (defined by the write command)
1	**0x03**	SADR	Actual slave address
2	0x86	ERR	Error, Bit „7“ with command 0x06 is set
3	0x05	EXCE	timeout slave, address wrong or not installed

6.4 Telegram example CMD = 6

6.4.1 Example, write parameter

Master wants to write parameter „C1.07” with value 1.000 V:

ID = 0x0030
DATA = 0x3E8 (= 1000 in decimal)
TADR = 0x23
SADR = 0x01

Byte	Data	Abbreviation
0	0x23	TADR
1	0x01	SADR
2	0x06	CMD
3	0x00	IDH
4	0x30	IDL
5	0x03	DATL
6	0xE8	DATH

Response from slave (module), command was successful executed
ID = 0x0030
DATA = 0x3E8 (= 1.000 V)

Byte	Data	Abbreviation
0	0x23	TADR
1	0x01	SADR
2	0x06	CMD
3	0x00	IDH
4	0x30	IDL
5	0x03	DATL
6	0xE8	DATH

6.4.2 Example, write set value

Examples for set value via Profinet (ID = 0x0027):

1.) Command signal 0.000 V = 0x0000:

Byte	Data	Abbreviation
0	0x12	TADR
1	0x01	SADR
2	0x06	CMD
3	0x00	IDH
4	0x27	IDL
5	0x00	DATL
6	0x00	DATH

2.) Set value 5.000 V = 0x1388:

Byte	Data	Abbreviation
0	0x12	TADR
1	0x01	SADR
2	0x06	CMD
3	0x00	IDH
4	0x27	IDL
5	0x13	DATL
6	0x88	DATH

3.) Set value 9.999 V = 0x270F:

Byte	Data	Abbreviation
0	0x12	TADR
1	0x01	SADR
2	0x06	CMD
3	0x00	IDH
4	0x27	IDL
5	0x27	DATL
6	0x0F	DATH

4.) Set value –9.999 V = 0xD8F1

Byte	Data	Abbreviation
0	0x12	TADR
1	0x01	SADR
2	0x06	CMD
3	0x00	IDH
4	0x27	IDL
5	0xD8	DATL
6	0xF1	DATH

7 Complex commands

7.1 CMD = 15, Master writes multiple parameters (3+5·module bytes) (Fast multi-slave command)

Parameter E22 in the related DMA-22(A)-module has to be set to the correct value within the range of 1 to 5 depending on the number of connected slaves (modules). The slave at the left side has the address „1" and the slave closest to the Profinet node will have the highest address setting.

Example: If 3 modules are used than E22 must be set to „1" for the first module on the left, to „2" for the second module in the middle and to „3" for the third module closest to the Profinet node
See □ Chapter "4.12.2 Multiple module Version (node with multiple modules connected)", page 32

Response telegrams are automatically multiplexed by the Profinet node.
See □ Chapter "7.4.2 Multiple-slave (3 DMA modules)", page 41.

Write first…

Byte	Structure					Abbreviation	Description	
0	0..0xFF					TADR	Telegram address, defined by the user, Range 0..255, 0..0xFF	
1	1	2	3	4	5	SNUM	Number of connected slaves (Maximum 5)	
2	15					CMD	Command: 15 = Write multiple parameter by the master	
3	1	1	1	1	1	DAT1.1	Control-Byte	Byte for special functions
4						DAT1.2H	Process Value1	High byte of first „analogue" value
5						DAT1.2L		Low byte of first „analogue" value
6						DAT1.3H	Process Value2	High byte of second „analogue" value
7						DAT1.3L		Low byte of second „analogue" value
8		2	2	2	2	DAT1.1	Control-Byte	Byte for special functions
9						DAT1.2H	Process Value1	High byte of first „analogue" value
10						DAT1.2L		Low byte of first „analogue" value
11						DAT1.3H	Process Value2	High byte of second „analogue" value
12						DAT1.3L		Low byte of second „analogue" value
13			3	3	3	DAT3.1	Control-Byte	Byte for special functions
14						DAT3.2H	Process Value1	High byte of first „analogue" value
15						DAT3.2L		Low byte of first „analogue" value
16						DAT3.3H	Process Value2	High byte of second „analogue" value
17						DAT3.3L		Low byte of second „analogue" value
18				4	4	DAT4.1	Control-Byte	Byte for special functions
19						DAT4.2H	Process Value1	High byte of first „analogue" value
20						DAT4.2L		Low byte of first „analogue" value
21						DAT4.3H	Process Value2	High byte of second „analogue" value
22						DAT4.3L		Low byte of second „analogue" value
23					5	DAT5.1	Control-Byte	Byte for special functions
24						DAT5.2H	Process Value1	High byte of first „analogue" value
25						DAT5.2L		Low byte of first „analogue" value
26						DAT5.3H	Process Value2	High byte of second „analogue" value
27						DAT5.3L		Low byte of second „analogue" value
	8	13	18	23	28	Overall telegram length in bytes		

TADR Telegram address, defined by the Profinet-Master. (defined by the user) Range 0..255

SNUM Number of connected slaves (Maximum 5).
Here for multi slave operation the number of present slaves has to be set properly.

CMD Command: 15 = Write multiple parameters by the master

DATx[1].1 Control-Byte. One data byte in HEX, for special functions
0x00 == 0
0xFF == 255

DATx[1].2H, DATx[1].2L Process Value1: Two data bytes in HEX, without decimal sign, for „analogue" values
0x7FFF == +32767
0x8000 == -32768

DATx[1].3H, DATx[1].3L Process Value1: Two data bytes in HEX, without decimal sign, for „analogue" values
0x7FFF == +32767
0x8000 == -32768

x[1].= Module address (set by parameter E22 in each DMA-22(A)-Module) range 1 to 5.

7.2 CMD = 15, Response from Slave (9 bytes)

Please pay attention to the fact that in case of multiple slave operation SADR will be changed automatically with each new response.

Example:
When using 3 slaves than the slave with the module address „1" (E22 = 1) will respond first. After the next „Master-Write" the slave with module address „2" (E22 = 2) will respond and finally the last slave with address „3" (E22 = 3). Then it starts again with slave „1".

This means that the multiplexer for answering is implemented in the Profinet node. SADR indicates which of the modules has actually send the response.

Write first…

Byte	Structure	Abbreviation	Description	
0	Telegram header	TADR	Telegram address, defined by the user, Range 0..255, 0..0xFF	
1		SADR	Slave address	
2		CMD	Command: 15 = Write multiple parameter by the master	
3	Data of SADR	DAT.1H	Status Word	High byte of module state
4		DAT.1L		Low byte of module state
5		DAT.2H	VALUE1	High byte of first „analogue" value
6		DAT.2L		Low byte of first „analogue" value
7		DAT.3H	VALUE2	High byte of second „analogue" value
8		DAT.3L		Low byte of second „analogue" value

…Write last

TADR Telegram address, defined by the Profinet-Master.(set by the user)

SADR Slave address, if more than one Slave is connected to the Profinet port
1 to max 5 depending on number of slaves

CMD Command: 15 = Write multiple parameters by the master

DAT.1H,DAT.1L Status word. Two data bytes in HEX, , for module state
0x0000 == 0
0xFFFF == 65535

DAT.2H, DAT.2L, DAT.3H, DAT.3L VALUE1
VALUE2. Two data bytes in HEX, without decimal sign, for analogue values
0x7FFF == +32767
0x8000 == -32768

7.3 CMD = 15, Error from Slave (4 bytes)

Write first…

Byte	Abbreviation	Description
0	TADR	Telegram address, defined by the write command, Range 0..255, 0..0xFF
1	SADR	Slave address
2	ERR	Error code
3	EXCE	Exception

…Write last

ERR Error code: 0x8F = write failed

EXCE Exception:
1 = Command not supported
2 = Wrong ID
3 = Wrong Data Value
4 = Writing of ID failed
5 = timeout (Modbus)
6 = Internal checksum error (Modbus)
7 = Invalid number of connected slaves
8 = timeout slave, address wrong or not installed
9 = Profinet node (SADR = 0) send, received data length to small. The data length of the selected GSD module is too small.

Example for error response:

Module 3 is not installed and SNUM in the master telegram is set to 3

Byte	Data	Abbreviation	Description
0	0x23	TADR	Response telegram address (defined by the write command)
1	**0x03**	SADR	Actual slave address
2	0x8F	ERR	Error, Bit „7" with command 0x0F in decimal 15 is set
3	0x08	EXCE	timeout slave, address wrong or not installed

7.4 Examples, CMD = 15

7.4.1 Single slave

E22 of the DMA-22(A) module is set to 1.
Hardware Enable is connected to the DMA-22(A) module.

Master writes set value of 1.000 V to slave (module):

Byte	Data	Abbreviation	Description
0	0x23	TADR	Telegram address, defined by the user, Range 0..255, 0..0xFF
1	0x01	SNUM	0x01 means single slave
2	0x0F	CMD	0x0F in decimal 15
3	0x00	DAT1.1	**Control byte** , 0x00 (default value, no bus-disable)
4	(1000)	DAT1.2H	**Process Value1 = A1.01, set value branch 1**
5		DAT1.2L	0x03E8 (= 1000 in decimal = 1.000V)
6	(0)	DAT1.3H	**Process Value2 = A1.02, feedback value branch 1**
7		DAT1.3L	0x0000 (= 0 in decimal = 0.000V)

Response slave (module) no.1:

Byte	Data		Abbreviation	Description	
0	0x23		TADR	Response telegram address (defined by the write command)	
1	0x01		SADR	Actual slave address	
2	0x0F		CMD	0x0F in decimal 15	
3	0x40		DAT1.1H	**Status word**	High byte of module state = 0x40 (HW enable = active)
4	0x00		DAT1.1L		Low byte of module state = 0x00
5	0x00	(0)	DAT1.2H	**VALUE1** = d1.11	
6	0x00		DAT1.2L	0x0000 (= 0 in decimal = 0.000V)	
7	0x03	(1000)	DAT1.3H	**VALUE2** = d1.10	
8	0xE8		DAT1.3L	0x03E8 (= 1000 in decimal = 1.000V)	

(x) = value in decimal.

7.4.2 Multiple-slave (3 DMA modules)

E22 of the three modules is set to 1, 2, 3.
All modules are powered on, hardware enable is connected all of the DMA-22(A)modules.

Master first write cycle: set value 1.000 V to slave1, 2.000 V to slave2 and - 3.000 V to slave3:

Byte	Data		Abbreviation	Description
0	0x23		TADR	Telegram address, defined by the user, Range 0..255, 0..0xFF
1	0x03		SNUM	0x03 means three slaves (modules) are connected
2	0x0F		CMD	0x0F in decimal 15
3	0x00		DAT1.1	**Control byte** , 0x00 (default value, no bus-disable)
4	0x03	(1000)	DAT1.2H	**Process Value1 = A1.01, set value branch 1**
5	0xE8		DAT1.2L	0x03E8 (= 1000 in decimal = 1.000V)
6	0x00	(0)	DAT1.3H	**Process Value2 = A1.02, feedback value branch 1**
7	0x00		DAT1.3L	0x0000 (= 0 in decimal = 0.000V)
8	0x00		DAT2.1	**Control byte** , 0x00 (default value, no bus-disable)
9	0x07	(2000)	DAT2.2H	**Process Value1 = A1.01, set value branch 1**
10	0xD0		DAT2.2L	0x07D0 (= 2000 in decimal = 2.000V)
11	0x00	(0)	DAT2.3H	**Process Value2 = A1.02, feedback value branch 1**
12	0x00		DAT2.3L	0x0000 (= 0 in decimal = 0.000V)
13	0x00		DAT3.1	**Control byte** , 0x00 (default value, no bus-disable)
14	0xF4	(-	DAT3.2H	**Process Value1 = A1.01, set value branch 1**
15	0x48	3000)	DAT3.2L	0xF448 (= - 3000 in decimal = - 3.000V)
16	0x00	(0)	DAT3.3H	**Process Value2 = A1.02, feedback value branch 1**
17	0x00		DAT3.3L	0x0000 (= 0 in decimal = 0.000V)

(x) = value in decimal.

The node will only send a response if **<u>any</u>** data in the telegram received from the master has be changed! If the data in a telegram have to remain unchanged than a response from the node to a ”Master write” can be enforced due to a change of the data TADR.
The data of the write command will be immediately forwarded to all slaves (modules). Each response telegram to a write command will automatically contain „new data” from the next slave (module). The slaves are automatically multiplexed.

Response telegrams are automatically multiplexed by the DMA-22(A)-Profinet node.
In this example, module 1 answers first

Byte	Abbreviation		Abbreviation	Description
0	0x23		TADR	Response telegram address (defined by the write command)
1	**0x01**		SADR	Actual slave address
2	0x0F		CMD	0x0F in decimal 15
3	0x40		DAT1.1H	High byte of module state, Hardware Enable is active, no error
3	0x00		DAT1.1L	Low byte of module state, not used, in this case always zero
4	0x00	(0)	DAT1.2H	**VALUE1** = d1.11
5	0x00		DAT1.2L	0x0000 (= 0 in decimal = 0.000V)
6	0x03	(1000)	DAT1.3H	**VALUE2** = d1.10
7	0xE8		DAT1.3L	0x03E8 (= 1000 in decimal = 1.000V)

(x) = value in decimal.

Change telegram address TADR to 0x24 and send same message as before. Next module no. 2 will answer.

Byte	Abbreviation		Abbreviation	Description
0	0x24		TADR	Response telegram address (defined by the write command)
1	**0x02**		SADR	Actual slave address
2	0x0F		CMD	0x0F in decimal 15
3	0x40		DAT1.1H	High byte of module state, Hardware Enable is active, no error
3	0x00		DAT1.1L	Low byte of module state, not used, in this case always zero
4	0x00	(0)	DAT1.2H	**VALUE1** = d1.11
5	0x00		DAT1.2L	0x0000 (= 0 in decimal = 0.000V)
6	0x07	(2000)	DAT1.3H	**VALUE2** = d1.10
7	0xD0		DAT1.3L	0x07D0 (= 2000 in decimal = 2.000V)

(x) = value in decimal.

Change telegram address TADR to 0x25 and send same message as before. Next module no. 3 will answer.

Byte	Abbreviation		Abbreviation	Description
0	0x25		TADR	Response telegram address (defined by the write command)
1	**0x03**		SADR	Actual slave address
2	0x0F		CMD	0x0F in decimal 15
3	0x40		DAT1.1H	High byte of module state, Hardware Enable is active, no error
3	0x00		DAT1.1L	Low byte of module state, not used, in this case always zero
4	0x00	(0)	DAT1.2H	**VALUE1** = d1.11
5	0x00		DAT1.2L	0x0000 (= 0 in decimal = 0.000V)
6	0xF4	(-	DAT1.3H	**VALUE2** = d1.10
7	0x48	3000)	DAT1.3L	0xF448 (= - 3000 in decimal = - 3.000V)

(x) = value in decimal.

Change telegram address TADR to 0x26 and send same message as before. Next module no. 1 will answer.

Byte	Abbreviation		Abbreviation	Description
0	0x26		TADR	Response telegram address (defined by the write command)
1	**0x01**		SADR	Actual slave address
2	0x0F		CMD	0x0F in decimal 15
3	0x40		DAT1.1H	High byte of module state, Hardware Enable is active, no error
3	0x00		DAT1.1L	Low byte of module state, not used, in this case always zero
4	0x00	(0)	DAT1.2H	**VALUE1** = d1.11
5	0x00		DAT1.2L	0x0000 (= 0 in decimal = 0.000V)
6	0x03	(1000)	DAT1.3H	**VALUE2** = d1.10
7	0xE8		DAT1.3L	0x03E8 (= 1000 in decimal = 1.000V)

(x) = value in decimal.

7.5 CMD = 15, structure of Profinet telegram definition, depending on SW Versions

7.5.1 General

7.5.1.1 Error Message (indication by „Error occurred”)

Errors which are indicated in the Bit (Error occurred) like for example „Over Current” or „Cable Fraction” can be reset with the following action :

- Set input signal for the hardware enable at the according module at terminal X3/1 (9) to „Low” and then go back to „High”
- Setting and resetting of the Bits (0x80) Bus-Disable

Mandatory condition for resetting an error is that the failure causing the error has been cleared or removed.

Error numbers:
The corresponding error numbers can be found in the respective manual of the DMA-22(A) Modules.
Generally, the following error table is valid:

SLAVE (MODULE) STATUS		Description
Hi-Byte (DAT.1H)	Low-Byte (DAT.1L)	
0x0C	0x01	Error of Operation
0x0C	0x02	Wire break at FB1 (voltage/current depend on setting)
0x0C	0x03	Excess current or short circuit at the output stages (peak current >8A!)
0x0C	0x04	Wire break at FB2 (voltage/current depend on setting)
0x0C	0x05	Wire break at S1.05 (voltage/current depend on setting)
0x0C	0x06	Wire break at S1.06 (voltage/current depend on setting)
0x0C	0x08	Underload of the solenoid output (if monitoring is activated)
0x0C	0x0A	Timeout error -no Profinet command recognized- (defined with parameter E23)
0x0C	0x0B	Over current at feedback FB1 (current signal >22mA)
0x0C	0x0C	Over current at feedback FB2 (current signal >22mA)
0x0C	0x0F	Over current at set point S1.05 (current signal >22mA)
0x0C	0x10	Over current at set point S1.06 (current signal >22mA)
0x0C	0x17	Selected Sensor need autocalibration.

Table 7: Error numbers

If parameter E 23 has a value not equal to 0 (Profinet timeout is activated). Depending on parameter E 26, there are different responses from the device.

- E 26 = off (0)
  The device reacts with a blinking enable LED about to long time between valid Profinet telegrams. Those versions continue with work if a new valid telegram is detected. No separate acknowledges with the enable signal is needed.
- E 26 = 1
  The device reacts with a shining Error LED about to long time between valid Profinet telegrams. Those versions do not continue with work if a new valid telegram is detected. A separate acknowledge with the enable signal is needed.

Generally, the electronic discards every set point in error case and the outputs will be disabled.

7.5.1.2 Explanation for „Hardware Enable” and „Software Disable”:

Generally speaking, the hardware enable must be present („high” level) in order to get a signal (current) at the output stages. Besides the hardware enable a software disable can be used in order to „override” the hardware enable. So even if the hardware signal is present, with the according software command the module can be disabled!

This means that the hardware enable can be hardwired and the software disable can be used in order to drop the output signal to zero or also in order to quit errors.

7.5.1.3 Explanation of special functions and module state bits

Attention: Functions and module state bits depend on the used SW version

HW_ENABLE	The „Enable" signal (HW Enable X3/1 (9)) is activated at the module.
ERROR	An Error has occurred in the DMA module. Different possible problems can cause this. Please refer to the manual for the according DMA version.
BUS_DISABLE	Enable signal was reset by means of Profinet (DMA module is disabled). Switching off the HW enable also resets any pending **BUS_DISABLE**
Din_1	To enable the function for the „remote loop controller" (function switches from open loop to closed loop) via the comparator „Comp_1" is enabled and can be used. Additional mandatory condition: C1.00 must be set to 2 or 4! Remark: d1.12 and d1.13 remain at „0.000 V" as long as the condition for activation „Din_1" has not be set. This will prevent a premature activation of the comparator „Comp_1".
Dout_1/CL	Indicates that the function „loop controller" for the branch 1 is active. When the module is working in „remote loop", the module is now working in closed loop mode. Additional mandatory conditions for transition from open loop to closed loop: • C1.00 must be set to 2 or 4 • Signal Din_1 must be present • Comparator Comp_1 has to be outside of the window, hence signal Comp_1 = 0. The module will remain in closed loop operation as long as signal Din_1 stays on „High".
Comp_1	Output signal of comparator „Comp_1", s used in order to monitor the signal defined by C1.25. This signal can also be used in order to switches over from open to closed loop: 0 = comparator is not active (out of the determined limits and time delays) 1 = comparator is active (inside the determined limits and time delays).
Comp_11	Output signal of comparator „Comp_11", is used in order to monitor the signal defined by C1.32 0 = comparator is not active (out of the determined limits and time delays) 1 = comparator is active (inside the determined limits and time delays).
Din_2	To enable the function for the „remote loop controller" (function switches from open loop to closed loop) via the comparator „Comp_2" is enabled and can be used. Additional mandatory condition: C2.00 must be set to 2 or 4! Remark: d2.12 and d2.13 remain at „0.000 V" as long as the condition for activation „Din_2" has not be set. This will prevent a premature activation of the comparator „Comp_2"..
Dout_2	Indicates that the function „loop controller" for the branch 2 is active. When the module is working in „remote loop", the module is now working in closed loop mode. Additional mandatory conditions for transition from open loop to closed loop: • C2.00 must be set to 2 or 4 • Signal Din_2 must be present • Comparator Comp_2 has to be outside of the window, hence signal Comp_2 = 0. The module will remain in closed loop operation as long as signal Din_2 stays on „High".
Comp_2	Output signal of comparator „Comp_2", s used in order to monitor the signal defined by C2.25. This signal can also be used in order to switches over from open to closed loop: 0 = comparator is not active (out of the determined limits and time delays) 1 = comparator is active (inside the determined limits and time delays).
Comp_22	Output signal of comparator „Comp_22", is used in order to monitor the signal defined by C2.32 0 = comparator is not active (out of the determined limits and time delays) 1 = comparator is active (inside the determined limits and time delays).
TST_CMP	This bit can be used to test the Set Error/Comp output. When set, the output is set to 24V, independent of the Comp_1/Comp_2 signal. To activate this function the parameter E 18 must be set to a value > 0 and no error is present.
CNTRL_4	Reserved for special function
STAT_1..5	Reserved for special functions

7.5.2 Version for Mode 1 (open loop, one valve with two solenoids)

Telegram structure example with 1 DMA module (SNUM = 1),
Master writes multiple parameters (3+5·module bytes)

Write first…

Comment	Byte	Structure	Abbreviation	Description	
	0	Telegram header	TADR	Telegram address, defined by User, Range 0..255, 0..0xFF	
	1		SNUM	Number of connected slaves (Maximum 5)	
	2		CMD	Command: 15 = Write multiple parameter by the master	
	3	Module Data	DAT1.1	**Control byte**	Byte for special functions
	4		DAT1.2H	**A1.01 Module 1**	
	5		DAT1.2L	Set value input (Profinet)	
	6		DAT1.3H	**A1.02 Module 1 (normally not used)**	
	7		DAT1.3L	Set value input (Profinet)	
….Write last		8	Overall telegram length in bytes		

Explanation of Byte for special functions (**Control byte**)

Description	Abbreviation	Function of each bit
Byte for special functions	DATx.1	Can be set only if the hardware enable is active. 0x01 = **not used** 0x04 = **TST_CMP**; Set Error/Comp output direct to 24V (disable signalizing of error output) 0x10 = **not used** 0x80 = **BUS_DISABLE** (Module disable via Profinet) In this mode not applicable, reserved: 0x02 = CNTRL_1 0x08 = CNTRL_2 0x20 = CNTRL_3 0x40 = CNTRL_4
		The special function byte will be set to internal 0x00 (reset) when the hardware enable is inactive.

Response telegram:

Write first…

Comment	Byte	Structure	Abbreviation	Description	
	0	Telegram header	TADR	Telegram address, defined by the write command	
	1		SADR	Slave address	
	2		CMD	Command: 15 = Write multiple parameter by the master	
	3	Data of SADR Module	DAT.1H	**Status word**	High byte of module state
	4		DAT.1L		Low byte of module state
	5		DAT.2H	**VALUE1** = d1.07 from module with related SADR	
	6		DAT.2L	Actual current A	
	7		DAT.3H	**VALUE2** = d1.08 from module with related SADR	
	8		DAT.3L	Actual current B	
….Write last		9	Overall telegram length in bytes		

Explanation of High and low byte of module state (**Status word**):

Description	Abbreviation	Explanation of each bit
High byte of module state	DAT.1H	0x01 = Digital input **SP1** (S1.01) active *) 0x02 = Digital input **SP2** (S1.02) active *) 0x04 = **HW_ENABLE**, hardware enable active 0x08 = **ERROR**, Error is pending 0x10 = Digital input **SP3** (S1.03 active *) 0x20 = Digital input **SP4** (S1.04 active *) 0x80 = **BUS_DISABLE** is set In this mode not applicable, reserved: 0x40 = STAT_5
Low byte of module state	DAT.1L	if „Error occurred" bit is set: error number otherwise: 0x01 = **not used** 0x02 = **not used** 0x04 = **not used** 0x08 = **not used** 0x10 = **not used** 0x20 = **not used** 0x40 = **not used** 0x80 = **not used**

*) The designation and availability of the input depends on the module variant.

7.5.3 Version for Mode 2 (open loop, two valves with one solenoid each)

Telegram structure example with 1 DMA module (SNUM = 1),
Master writes multiple parameters (3+5·module bytes)

Write first…

Comment	Byte	Structure	Abbreviation	Description	
	0	Telegram header	TADR	Telegram address, defined by User, Range 0..255, 0..0xFF	
	1		SNUM	Number of connected slaves (Maximum 5)	
	2		CMD	Command: 15 = Write multiple parameter by the master	
	3	Module Data	DAT1.1	**Control byte**	Byte for special functions
	4		DAT1.2H	**A1.01,** set value input (Profinet) for (Branch 1)	
	5		DAT1.2L		
	6		DAT1.3H	**A2.01,** set value input (Profinet) for (Branch 2)	
	7		DAT1.3L		
….Write last		8	Overall telegram length in bytes		

Explanation of Byte for special functions (**Control byte**)

Description	Abbreviation	Function of each bit
Byte for special functions	DATx.1	Can be set only if the hardware enable is active. 0x01 = not used 0x04 = **TST_CMP**; Set Error/Comp output direct to 24V (disable signalizing of error output) 0x10 = not used 0x80 = **BUS_DISABLE** (Module disable via Profinet) In this mode not applicable, reserved: 0x02 = CNTRL_1 0x08 = CNTRL_2 0x20 = CNTRL_3 0x40 = CNTRL_4
		The special function byte will be set to internal 0x00 (reset) when the hardware enable is inactive.

Response telegram:

Write first…

Comment	Byte	Structure	Abbreviation	Description	
	0	Telegram header	TADR	Telegram address, defined by the write command	
	1		SADR	Slave address	
	2		CMD	Command: 15 = Write multiple parameter by the master	
	3	Data of SADR Module	DAT.1H	**Status word**	High byte of module state
	4		DAT.1L		Low byte of module state
	5		DAT.2H	**VALUE1** = d1.07 from module with related SADR	
	6		DAT.2L	Actual current A	
	7		DAT.3H	**VALUE2** = d1.08 from module with related SADR	
	8		DAT.3L	Actual current B	
….Write last		9	Overall telegram length in bytes		

Explanation of High and low byte of module state (**Status word**):

Description	Abbreviation	Explanation of each bit
High byte of module state	DAT.1H	0x01 = Digital input **SP1** (S1.01) active *) 0x02 = Digital input **SP2** (S1.02) active *) 0x04 = **HW_ENABLE**, hardware enable active 0x08 = **ERROR**, Error is pending 0x10 = Digital input **SP3** (S2.01) active *) 0x20 = Digital input **SP4** (S2.02) active *) 0x80 = **BUS_DISABLE** is set In this mode not applicable, reserved: 0x40 = STAT_5
Low byte of module state	DAT.1L	if „Error occurred" bit is set: error number otherwise: 0x01 = not used 0x02 = not used 0x04 = not used 0x08 = not used 0x10 = not used 0x20 = not used 0x40 = not used 0x80 = not used

*) The designation and availability of the input depends on the module variant.

7.5.4 Version for Mode 2 with separate enable (open loop, two valves with one solenoid each)

Telegram structure example with 1 DMA module (SNUM = 1),
Master writes multiple parameters (3+5·module bytes)

Write first…

Comment	Byte	Structure	Abbreviation	Description	
	0	Telegram header	TADR	Telegram address, defined by User, Range 0..255, 0..0xFF	
	1		SNUM	Number of connected slaves (Maximum 5)	
	2		CMD	Command: 15 = Write multiple parameter by the master	
	3	Module Data	DAT1.1	**Control byte**	Byte for special functions
	4		DAT1.2H	**A1.01,** set value input (Profinet) for (Branch 1)	
	5		DAT1.2L		
	6		DAT1.3H	**A2.01,** set value input (Profinet) for (Branch 2)	
	7		DAT1.3L		
….Write last		8	Overall telegram length in bytes		

Explanation of Byte for special functions (**Control byte**)

Description	Abbreviation	Function of each bit
Byte for special functions	DATx.1	Can be set only if the hardware enable is active. 0x01 = **BusEnable_1**; Set signal to active solenoid output 1(A) 0x04 = **TST_CMP**; Set Error/Comp output direct to 24V (disable signalizing of error output) 0x10 = **BusEnable_2**; Set signal to active solenoid output 2(B) 0x80 = **BUS_DISABLE** (Module disable via Profinet) In this mode not applicable, reserved: 0x02 = CNTRL_1 0x08 = CNTRL_2 0x20 = CNTRL_3 0x40 = CNTRL_4
		The special function byte will be set to internal 0x00 (reset) when the hardware enable is inactive.

Response telegram:

Write first…

Comment	Byte	Structure	Abbreviation	Description	
	0	Telegram header	TADR	Telegram address, defined by the write command	
	1		SADR	Slave address	
	2		CMD	Command: 15 = Write multiple parameter by the master	
	3	Data of SADR Module	DAT.1H	**Status word**	High byte of module state
	4		DAT.1L		Low byte of module state
	5		DAT.2H	**VALUE1** = d1.07 from module with related SADR Actual current A	
	6		DAT.2L		
	7		DAT.3H	**VALUE2** = d1.08 from module with related SADR Actual current B	
	8		DAT.3L		
….Write last		9	Overall telegram length in bytes		

Explanation of High and low byte of module state (**Status word**):

Description	Abbreviation	Explanation of each bit
High byte of module state	DAT.1H	0x01 = Digital input Enable**1** (A) active *) 0x02 = Digital input Enable**2** (B) active *) 0x04 = **HW_ENABLE**, hardware enable active 0x08 = **ERROR**, Error is pending 0x10 = not used 0x20 = not used 0x80 = **BUS_DISABLE** is set In this mode not applicable, reserved: 0x40 = STAT_5
Low byte of module state	DAT.1L	if „Error occurred" bit is set: error number otherwise: 0x01 = **BusEnable_1** active 0x02 = not used 0x04 = not used 0x08 = not used 0x10 = **BusEnable_2** active 0x20 = not used 0x40 = not used 0x80 = not used

7.5.5 Version for Mode 3, 4, 10 (closed loop)

Telegram structure example with 1 DMA module (SNUM = 1), Master writes multiple parameters (3+5·module bytes)

Write first…

Comment	Byte	Structure	Abbreviation	Description	
	0	Telegram header	TADR	Telegram address, defined by User, Range 0..255, 0..0xFF	
	1		SNUM	Number of connected slaves (Maximum 5)	
	2		CMD	Command: 15 = Write multiple parameter by the master	
	3	Module Data	DAT1.1	**Control byte**	Byte for special functions
	4		DAT1.2H	**Process Value1 = A1.01**	
	5		DAT1.2L	Set value input (Profinet) for (Branch 1)	
	6		DAT1.3H	**Process Value2 = A1.02**	
	7		DAT1.3L	Feedback value input (Profinet) for (Branch 1)	
….Write last		8	Overall telegram length in bytes		

Explanation of Byte for special functions (**Control byte**)

Description	Abbreviation	Function of each bit
Byte for special functions	DATx.1	Can be set only if the hardware enable is active. 0x01 = **Din_1**; Set signal Din_1 to active 0x04 = **TST_CMP**; Set Error/Comp output direct to 24V (disable signalizing of error output) 0x10 = **Din_2**; Set signal Din_2 to active 0x80 = **BUS_DISABLE** (Module disable via Profinet) In this mode not applicable, reserved: 0x02 = CNTRL_1 0x08 = CNTRL_2 0x20 = CNTRL_3 0x40 = CNTRL_4 Special since V4x.02* 0x40 = CNTRL_4: Set Error/Comp Output
		The special function byte will be set to internal 0x00 (reset) when the hardware enable is inactive.

Response telegram:

Write first…

Comment	Byte	Structure	Abbreviation	Description	
	0	Telegram header	TADR	Telegram address, defined by the write command	
	1		SADR	Slave address	
	2		CMD	Command: 15 = Write multiple parameter by the master	
	3	Data of SADR Module	DAT.1H	**Status word**	High byte of module state
	4		DAT.1L		Low byte of module state
	5		DAT.2H	**VALUE1** = d1.11 from module with related SADR	
	6		DAT.2L	Actual value, feedback value (Branch 1)	
	7		DAT.3H	**VALUE2** = d1.10 from module with related SADR	
	8		DAT.3L	Set value (internal value) (Branch 1)	
….Write last		9	Overall telegram length in bytes		

Explanation of High and low byte of module state (**Status word**):

Description	Abbreviation	Explanation of each bit
High byte of module state	DAT.1H	0x01 = Digital input **SP1** (S1.01) active *) 0x02 = Digital input **SP2** (S1.02) active *) 0x04 = **HW_ENABLE**, hardware enable active 0x08 = **ERROR**, Error is pending 0x10 = Digital input **SP3** (S2.01) active *) 0x20 = Digital input **SP4** (S2.02) active *) 0x80 = **BUS_DISABLE** is set In this mode not applicable, reserved: 0x40 = STAT_5 Special since V4x.02* 0x40 = STAT_5: Status of Error/Comp Output
Low byte of module state	DAT.1L	if „Error occurred" bit is set: error number otherwise: 0x01 = **Din_1** active 0x02 = **Dout_1** active 0x04 = **Comp_1** active 0x08 = **Comp_11** active 0x10 = **Din_2** active 0x20 = **Dout_2** active 0x40 = **Comp_2** active 0x80 = **Comp_22** active

*) The designation and availability of the input depends on the module variant.

7.5.6 Version for Mode 6, 11 (two closed loops)

Telegram structure example with 1 DMA module (SNUM = 1), Master writes multiple parameters (3+5·module bytes)

Write first…

Comment	Byte	Structure	Abbreviation	Description	
	0	Telegram header	TADR	Telegram address, defined by User, Range 0..255, 0..0xFF	
	1		SNUM	Number of connected slaves (Maximum 5)	
	2		CMD	Command: 15 = Write multiple parameter by the master	
	3	Module Data	DAT1.1	**Control byte**	Byte for special functions
	4		DAT1.2H	**Process Value1 = A1.01**	
	5		DAT1.2L	Set value input (Profinet) for (Branch 1)	
	6		DAT1.3H	**Process Value2 = A2.02**	
	7		DAT1.3L	Feedback value input (Profinet) for (Branch 2)	
….Write last		8	Overall telegram length in bytes		

Explanation of Byte for special functions (**Control byte**)

Description	Abbreviation	Function of each bit
Byte for special functions	DATx.1	Can be set only if the hardware enable is active. 0x01 = **Din_1**; Set signal Din_1 to active 0x04 = **TST_CMP**; Set Error/Comp output direct to 24V (disable signalizing of error output) 0x10 = **Din_2**; Set signal Din_2 to active 0x80 = **BUS_DISABLE** (Module disable via Profinet) In this mode not applicable, reserved: 0x02 = CNTRL_1 0x08 = CNTRL_2 0x20 = CNTRL_3 0x40 = CNTRL_4 Special since V4x.02* 0x40 = CNTRL_4: Set Error/Comp Output
		The special function byte will be set to internal 0x00 (reset) when the hardware enable is inactive.

Response telegram:

Write first…

Comment	Byte	Structure	Abbreviation	Description	
	0	Telegram header	TADR	Telegram address, defined by the write command	
	1		SADR	Slave address	
	2		CMD	Command: 15 = Write multiple parameter by the master	
	3	Data of SADR Module	DAT.1H	**Status word**	High byte of module state
	4		DAT.1L		Low byte of module state
	5		DAT.2H	**VALUE1** = d1.11 from module with related SADR	
	6		DAT.2L	Actual value, feedback value (Branch 1)	
	7		DAT.3H	**VALUE2** = d2.11 from module with related SADR	
	8		DAT.3L	Actual value, feedback value (Branch 2)	
….Write last		9	Overall telegram length in bytes		

Explanation of High and low byte of module state (**Status word**):

Description	Abbreviation	Explanation of each bit
High byte of module state	DAT.1H	0x01 = Digital input **SP1** (S1.01) active *) 0x02 = Digital input **SP2** (S1.02) active *) 0x04 = **HW_ENABLE**, hardware enable active 0x08 = **ERROR**, Error is pending 0x10 = Digital input **SP3** (S2.01) active *) 0x20 = Digital input **SP4** (S2.02) active *) 0x80 = **BUS_DISABLE** is set In this mode not applicable, reserved: 0x40 = STAT_5 Special since V4x.02* 0x40 = STAT_5: Status of Error/Comp Output
Low byte of module state	DAT.1L	if „Error occurred" bit is set: error number otherwise: 0x01 = **Din_1** active 0x02 = **Dout_1** active 0x04 = **Comp_1** active 0x08 = **Comp_11** active 0x10 = **Din_2** active 0x20 = **Dout_2** active 0x40 = **Comp_2** active 0x80 = **Comp_22** active

*) The designation and availability of the input depends on the module variant.

7.5.7 Version for Mode 8 (closed loop)

Telegram structure example with 1 DMA module (SNUM = 1), Master writes multiple parameters (3+5·module bytes)

Write first…

Comment	Byte	Structure	Abbreviation	Description	
	0	Telegram header	TADR	Telegram address, defined by User, Range 0..255, 0..0xFF	
	1		SNUM	Number of connected slaves (Maximum 5)	
	2		CMD	Command: 15 = Write multiple parameter by the master	
	3	Module Data	DAT1.1	**Control byte**	Byte for special functions
	4		DAT1.2H	**Process Value1 = A1.01**	
	5		DAT1.2L	Set value input (Profinet) for (Branch 1)	
	6		DAT1.3H	**Process Value2 = A2.01 S**	
	7		DAT1.3L	Set value input (Profinet) for (Branch 2)	
….Write last		8	Overall telegram length in bytes		

Explanation of Byte for special functions (**Control byte**)

Description	Abbreviation	Function of each bit
Byte for special functions	DATx.1	Can be set only if the hardware enable is active. 0x01 = **Din_1**; Set signal Din_1 to active 0x04 = **TST_CMP**; Set Error/Comp output direct to 24V (disable signalizing of error output) 0x10 = **Din_2**; Set signal Din_2 to active 0x80 = **BUS_DISABLE** (Module disable via Profinet) Not applicable, reserved: 0x02 = CNTRL_1 0x08 = CNTRL_2 0x20 = CNTRL_3 0x40 = CNTRL_4 Special since V4x.02* 0x40 = CNTRL_4: Set Error/Comp Output
		The special function byte will be set to internal 0x00 (reset) when the hardware enable is inactive.

Response telegram:

Write first…

Comment	Byte	Structure	Abbreviation	Description	
	0	Telegram header	TADR	Telegram address, defined by the write command	
	1		SADR	Slave address	
	2		CMD	Command: 15 = Write multiple parameter by the master	
	3	Data of SADR Module	DAT.1H	**Status word**	High byte of module state
	4		DAT.1L		Low byte of module state
	5		DAT.2H	**VALUE1** = d1.11 from module with related SADR	
	6		DAT.2L	Actual value, feedback value (Branch 1)	
	7		DAT.3H	**VALUE2** = d2.11 from module with related SADR	
	8		DAT.3L	Actual value, feedback value (Branch 2)	
….Write last		9	Overall telegram length in bytes		

Explanation of High and low byte of module state (**Status word**):

Description	Abbreviation	Explanation of each bit
High byte of module state	DAT.1H	0x01 = Digital input **SP1** (S1.01) active *) 0x02 = Digital input **SP2** (S1.02) active *) 0x04 = **HW_ENABLE**, hardware enable active 0x08 = **ERROR**, Error is pending 0x10 = Digital input **SP3** (S2.01) active *) 0x20 = Digital input **SP4** (S2.02) active *) 0x80 = **BUS_DISABLE** is set In this mode not applicable, reserved: 0x40 = STAT_5 Special since V4x.02* 0x40 = STAT_5: Status of Error/Comp Output
Low byte of module state	DAT.1L	if „Error occurred" bit is set: error number otherwise: 0x01 = **Din_1** active 0x02 = **Dout_1** active 0x04 = **Comp_1** active 0x08 = **Comp_11** active 0x10 = **Din_2** active 0x20 = **Dout_2** active 0x40 = **Comp_2** active 0x80 = **Comp_22** active

*) The designation and availability of the input depends on the module variant.

7.6 Digital inputs

The DMA-22(A) has three digital inputs

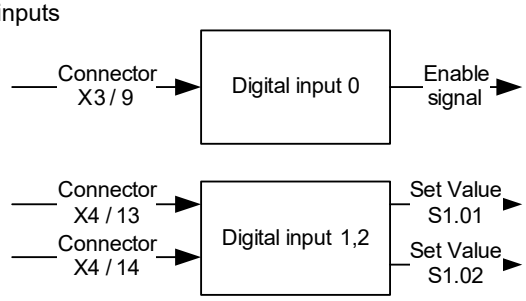

Figure 25: Digital inputs

7.6.1 Digital input 0 (enable signal) input 1,2 (set Value selection)

The digital enable signal incorporates the following functions:

- Removes the hardware locking of the output stages
- Start the solenoid current controller
- Start the control loop of branch 1 and/or branch 2

The set value selection signal incorporates the following functions:

- Select the set value of parameter S1.01, S1.02
- Set the signal Din_1, Din_2 when the “remote controller” is selected.

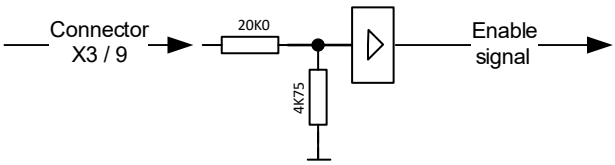

Figure 26: schematic of digital input 0,1,2

Enable Signal	Description
ON	Signal of digital input > 8V
OFF	Signal of digital input < 3V

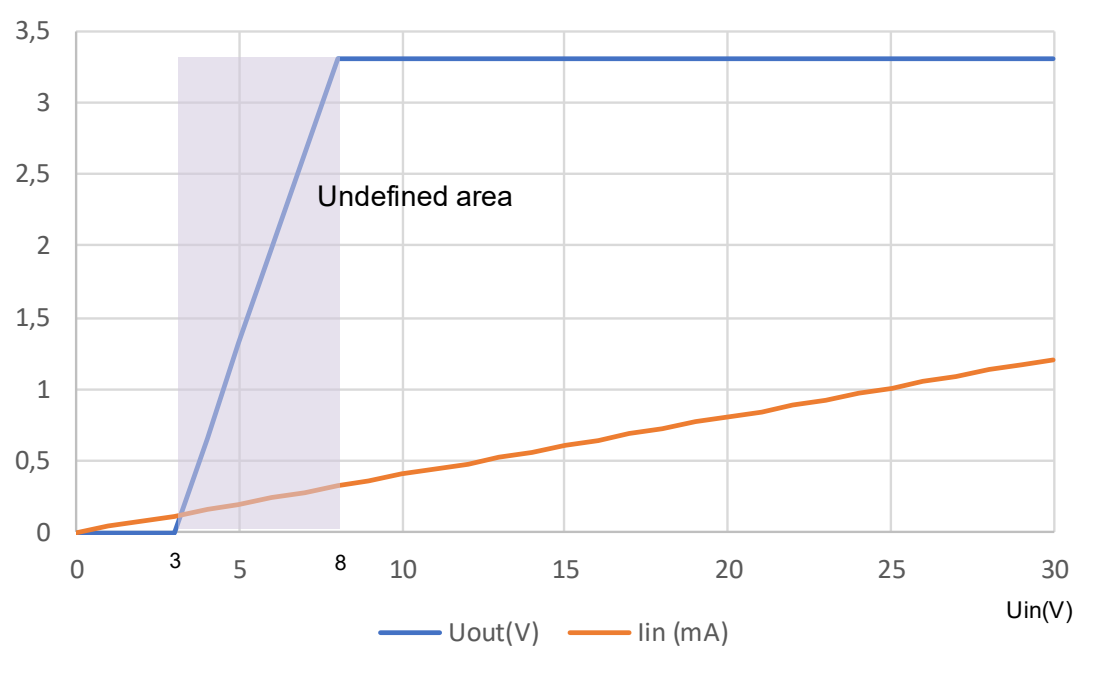

Figure 27: Input Signal curve

7.7 Digital outputs

The following digital output is available.

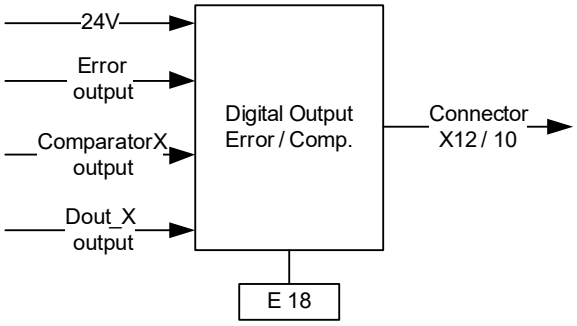

Figure 28: Digital outputs

7.7.1 Digital output: \Error or Comparator output

At the terminal X12 / 10 the error output or comparator is available (Depending on setting E18)
If an error occurred, the output is low (negative logic).

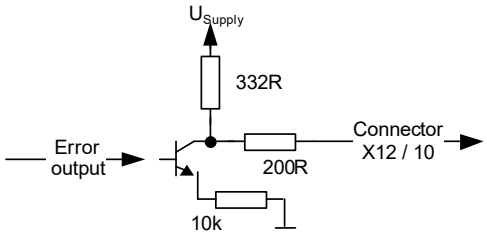

Figure 29: schematic of digital output \Error/comp.

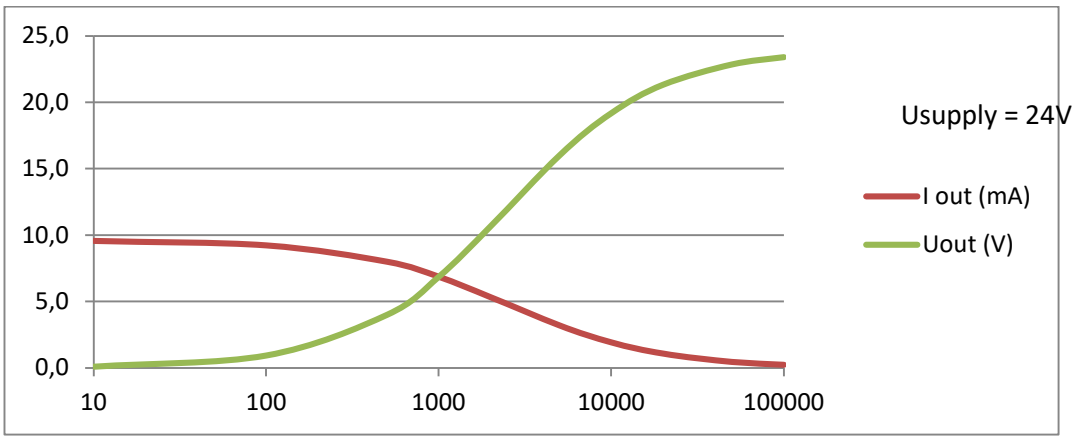

Figure 30: Output high, voltage and current curve at 24V supply

RL in Ohm

On the output pin X12 / 10 can also be used as a universal output.

7.7.2 Internal supply output

Normally the output voltage is fixed to 10V ref. (on customer request the output voltage can be changed). The connector pin for the outputis not fix. Please refer the label on the DMA module.

7.7.3 Analog voltage output

Maximal output current 6mA.
The connector pin for the output is not fix. Please refer the label on the DMA module.

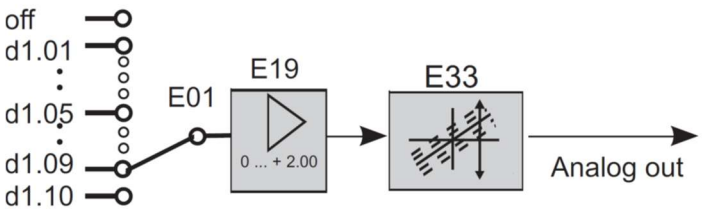

7.8 Status display LEDs

The network and the amplifier states are indicated by light emitting diodes (status display LEDs) on the electronics housing.

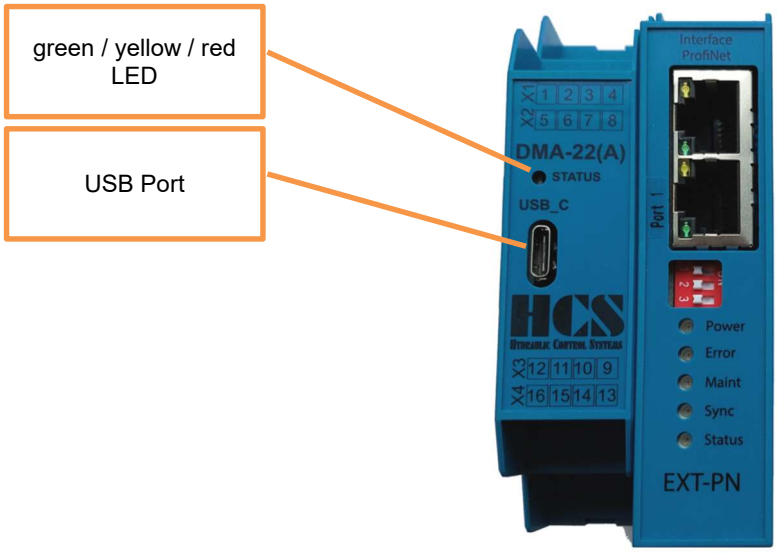

Figure 31: Top view, status LEDs and USB Port

7.8.1 LED definition

LED	Definition
ON	constantly ON
OFF	constantly OFF
Blinking	equal ON and OFF times with a frequency of 1.0 Hz: ON/OFF = 500 ms.
Fast Blinking	equal ON and OFF times with a frequency of 4.0 Hz: ON/OFF = 125 ms.
Flashing	Different ON and OFF times: ON = 50 ms, OFF = 250 ms.
Flicker flash	Different ON and OFF times: ON = 100 ms, OFF = 400 ms.

Table 8: LED definitions

7.8.2 LED status definition

Definition « Enable Signal » see □ Chapter “7.6.1 Digital input 0 (enable signal)“, page 51

EXT-PB	DMA-22(A)			Enable Signal	Description
Red LED	Green LED	Yellow LED	Red LED		
OFF	OFF	OFF	OFF	---	No power is applied to the amplifier
OFF	ON	OFF	OFF	OFF	Power is applied via external source or the USB interface.
OFF	OFF	Blinking	OFF	ON	The device is in the semiautomatic sensor calibration process.
OFF	OFF	Fast Blinking	OFF	ON	Enable signal is on, and the parameter E 09 is set to a certain value. Or, the device is disabled by bus command.
OFF	OFF	Flashing	OFF	ON	Timeout occurred, parameter E 26 is set to 0. (ProfiNet timeout causes no error)
OFF	OFF	ON	OFF	ON	Enable of the device is active.
--	OFF	OFF	ON	ON	Internal error occurred.
--	OFF	OFF	Blinking	ON	Internal error occurred, communication with the PROFINET board disturbed.

8 PLC configurator

Module catalog: Please select the “IN/OUT 42 byte Rev……” module.

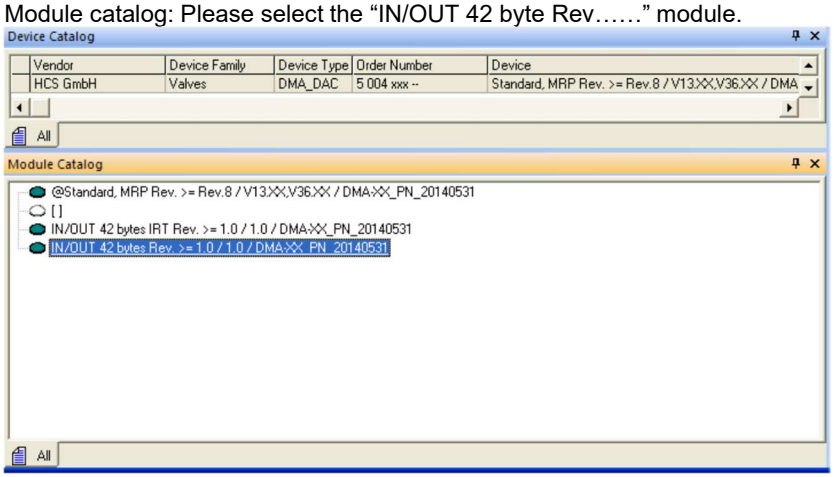

Automatically an 42 byte in- output buffer will be reserved.
So all kind of DMA module configuration can processed.

And insert this module into the bus structure.

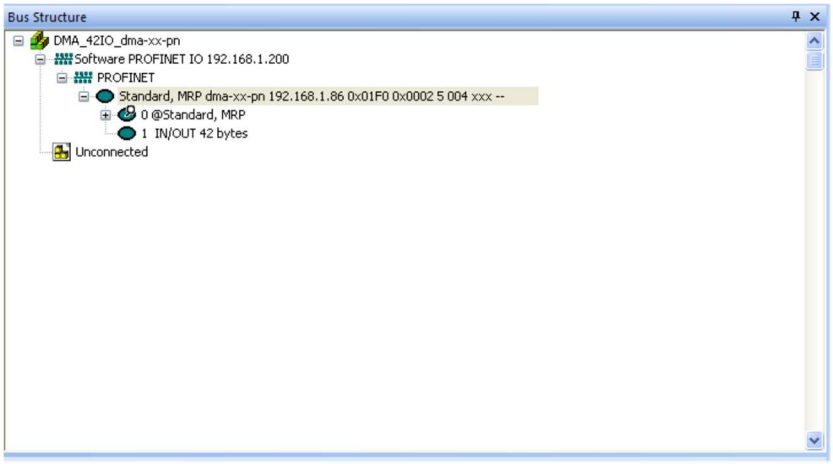

Device details:

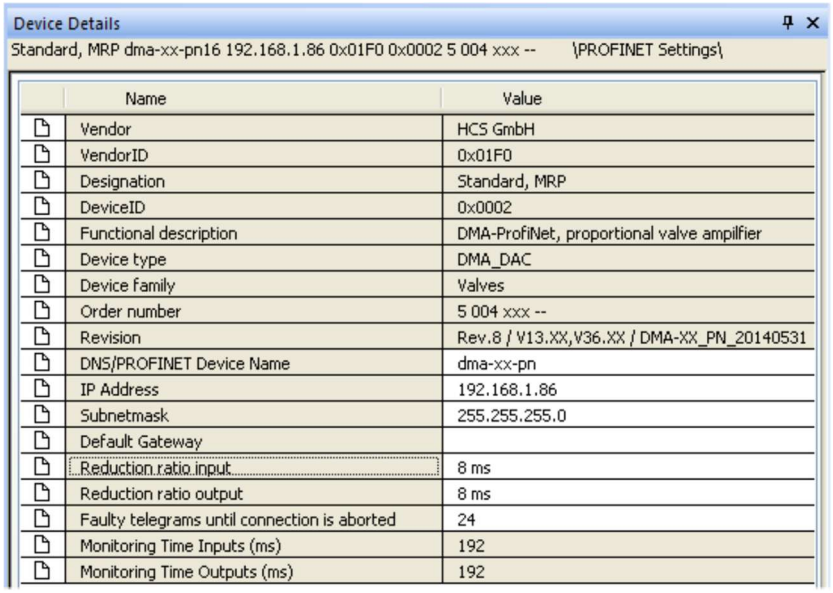

Device Details

Standard, MRP dma-xx-pn16 192.168.1.86 0x01F0 0x0002 5 004 xxx -- \PROFINET Settings\

Name	Value
Vendor	HCS GmbH
VendorID	0x01F0
Designation	Standard, MRP
DeviceID	0x0002
Functional description	DMA-ProfiNet, proportional valve ampilfier
Device type	DMA_DAC
Device family	Valves
Order number	5 004 xxx --
Revision	Rev.8 / V13.XX,V36.XX / DMA-XX_PN_20140531
DNS/PROFINET Device Name	dma-xx-pn
IP Address	192.168.1.86
Subnetmask	255.255.255.0
Default Gateway	
Reduction ratio input	8 ms
Reduction ratio output	8 ms
Faulty telegrams until connection is aborted	24
Monitoring Time Inputs (ms)	192
Monitoring Time Outputs (ms)	192

9 Configuration for SIEMENS TIA portal

Two Profinet function blocks for the Siemens TIA portal are available, and can be downloaded from the HCS web side.
Which one, the user should take, is depending on the used CPU family.

- Siemens CPU series S7-300,400 PN_DMA_2_CLASSIC_DB(Vxx).scl
- Siemens CPU series S7-1200,1500 PN_DMA_2_DB.scl(Vxx).scl

(If the DMA fold is mixed with DMA's, working in different mode's, only the bits for the control-byte and the status-word for the certain DMA module is useable).

9.1 Setup the network configuration for the DMA module

Download and install the GSD file

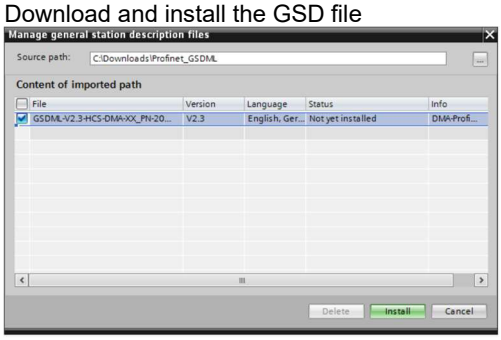

Go online, update accessible devices, assign IP-address and assign name

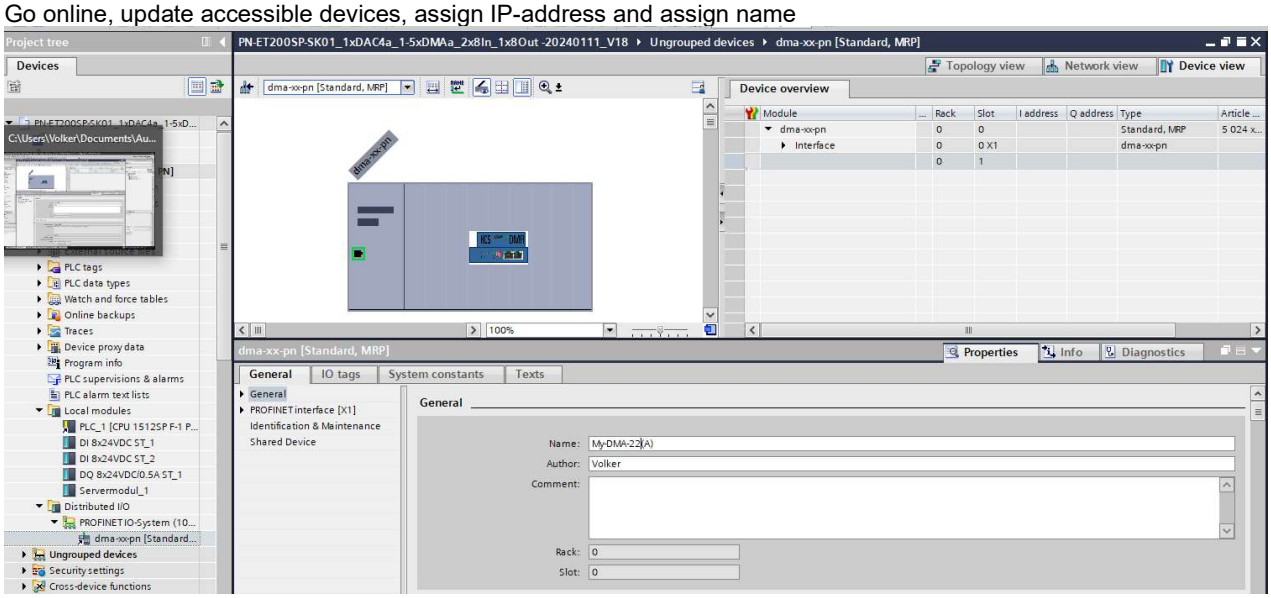

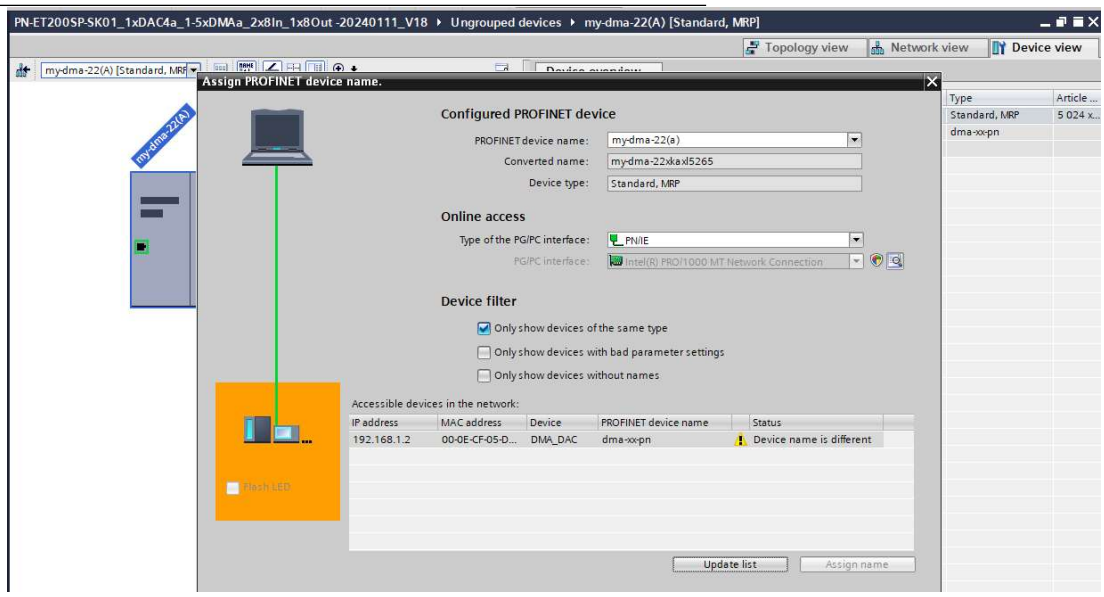

Add new “Distributed I/O” and connect The DMA to the network.

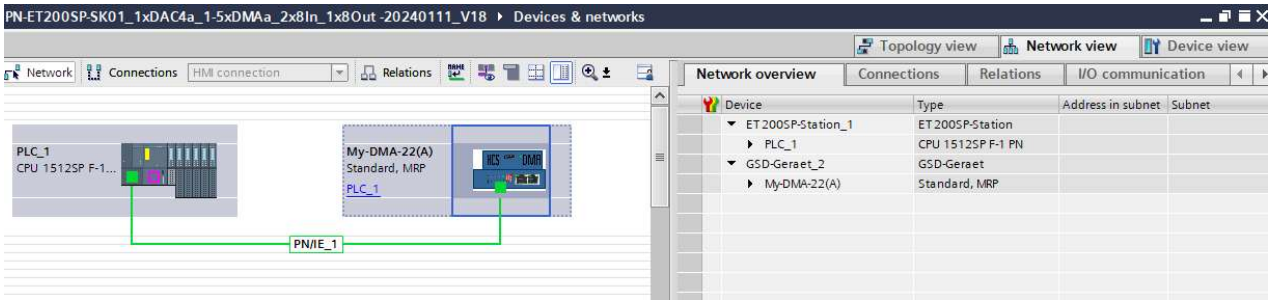

9.2 Assign the IO-Module from the GSD to the device

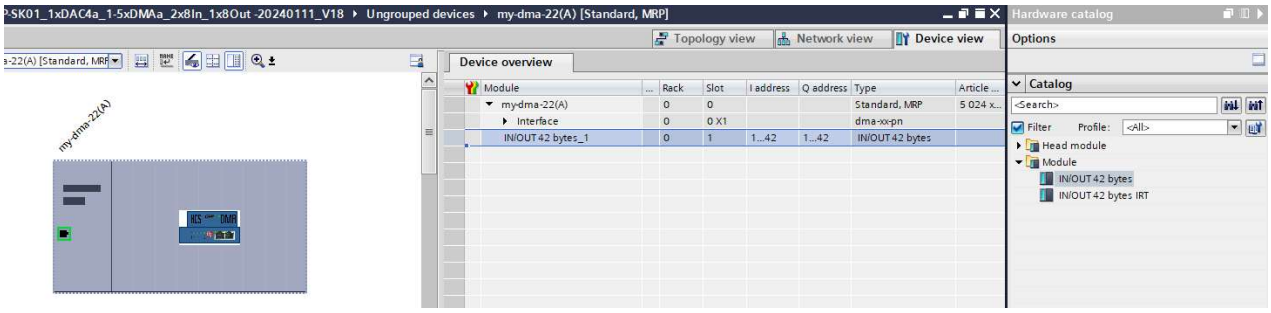

9.3 Install the function block

Add new external file, Chose the function block according your used CPU series

- Siemens CPU series S7-300,400 PN_DMA_2_CLASSIC_DB(Vxx).scl
- Siemens CPU series S7-1200,1500 PN_DMA_2_DB.scl(Vxx).scl

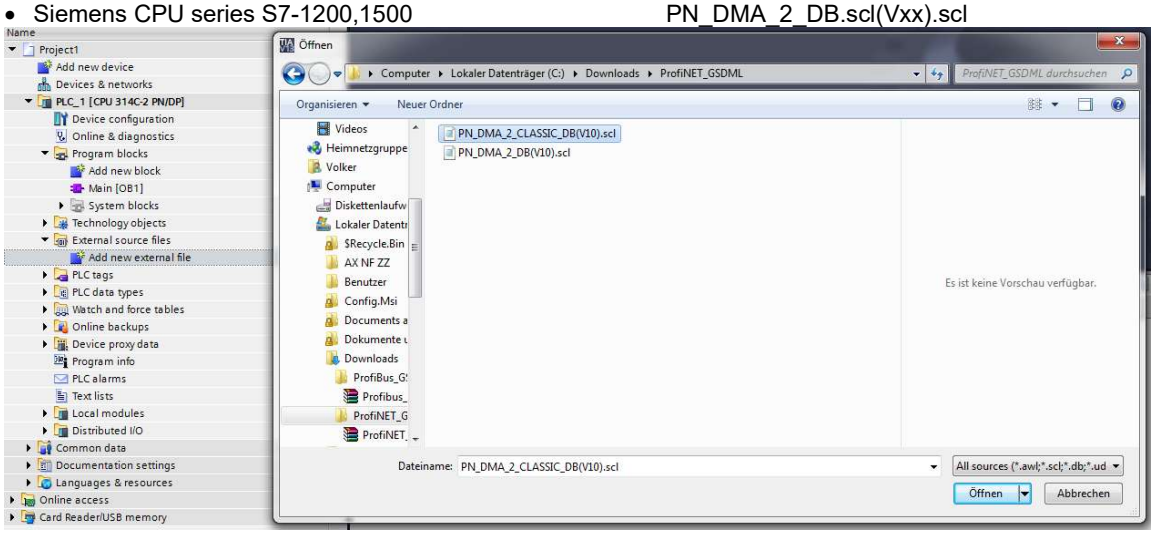

Right click on the selected file and “Generate blocks from the source”

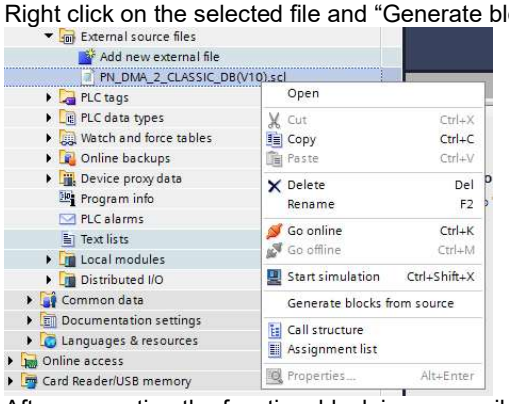

After generation the functionsblock is now available

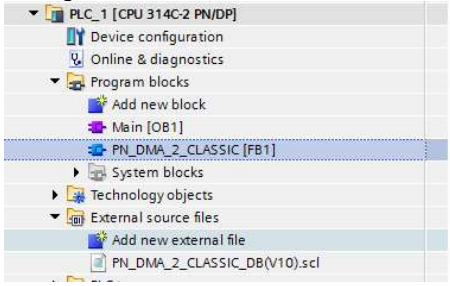

9.4 Explanation of the function block

9.4.1 General

In this chapter we describe, how to use the function block in the different modes.
The structure and function for CMD 3, CMD 6 is the same in every working mode of the DMA-2. Only the CMD 15 differs depending on the DMA-2 operation mode.

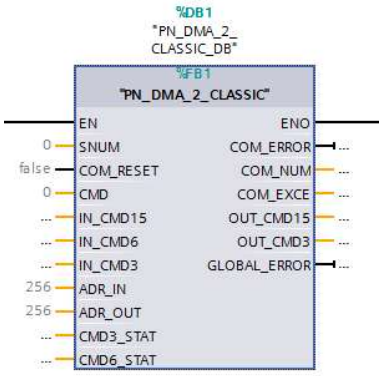

The Bus slave address SNUM of every connected DMA-2 is defined by the parameter E 22.

SNUM	Int

The COM_ERROR is obtained from the telegram header, which is transmitted from the Profinet node to the PLC. When this error is pending, the slave address source and the cause can be found out by analyze the COM_EXCE code.
(See □ Chapter “6.1.3 CMD = 3, Error from Slave (4 bytes)“, page 35
or □ Chapter “6.3.3 CMD = 6, Error from Slave (4 bytes)”, page 37

Reset an communication error can by set the input #COM_RESET

COM_RESET	Bool

An GLOBAL_ERROR occurs if any communication error or/and internal DMA-2 error is pending.

GLOBAL_ERROR	Bool

9.4.2 Classic CPU 300,400: Definition of the data buffer address

Unlike the CPU 1200, 1500, the E-address and A-address must be assigned to the variables #ADR_IN and #ADR_OUT here.

The data buffer address #ADR_IN, #ADR_OUT is predefined to 256.

Please check the correct address of your system and change the value if necessary.

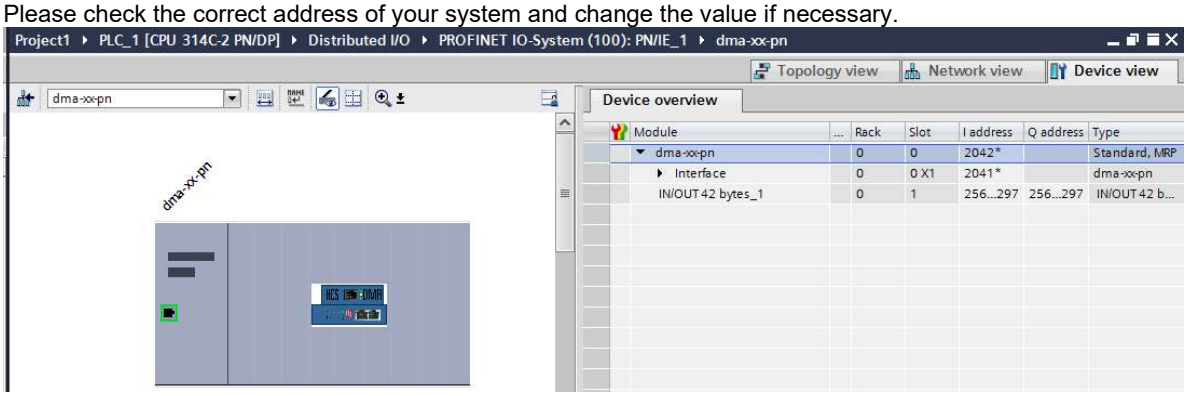

9.4.3 CPU 1200,1500: Specification of the data buffer address based on the hardware identifier

In contrast to CPU 300, 400, the hardware ID for the GSD I / O module must be assigned to the variable #DEV_ID. The data buffer address #ADR_IN, #ADR_OUT is predefined in this example at 262.

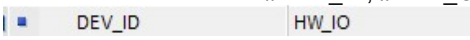

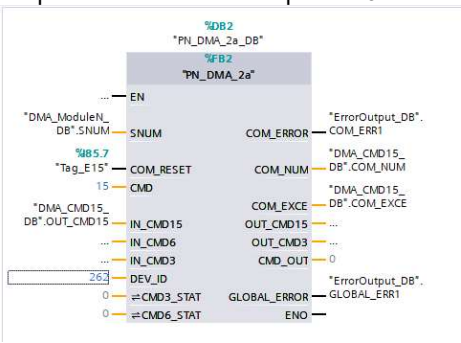

Please check the correct address of your system and change the value if necessary.

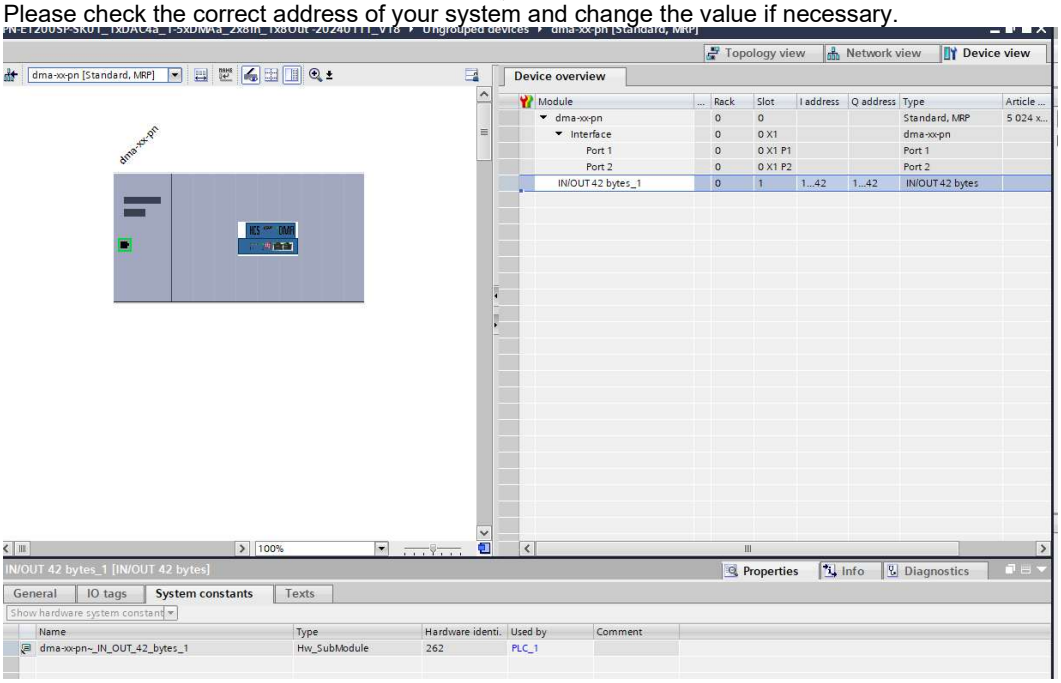

Please check the correct IP address of the device and change the value if necessary.

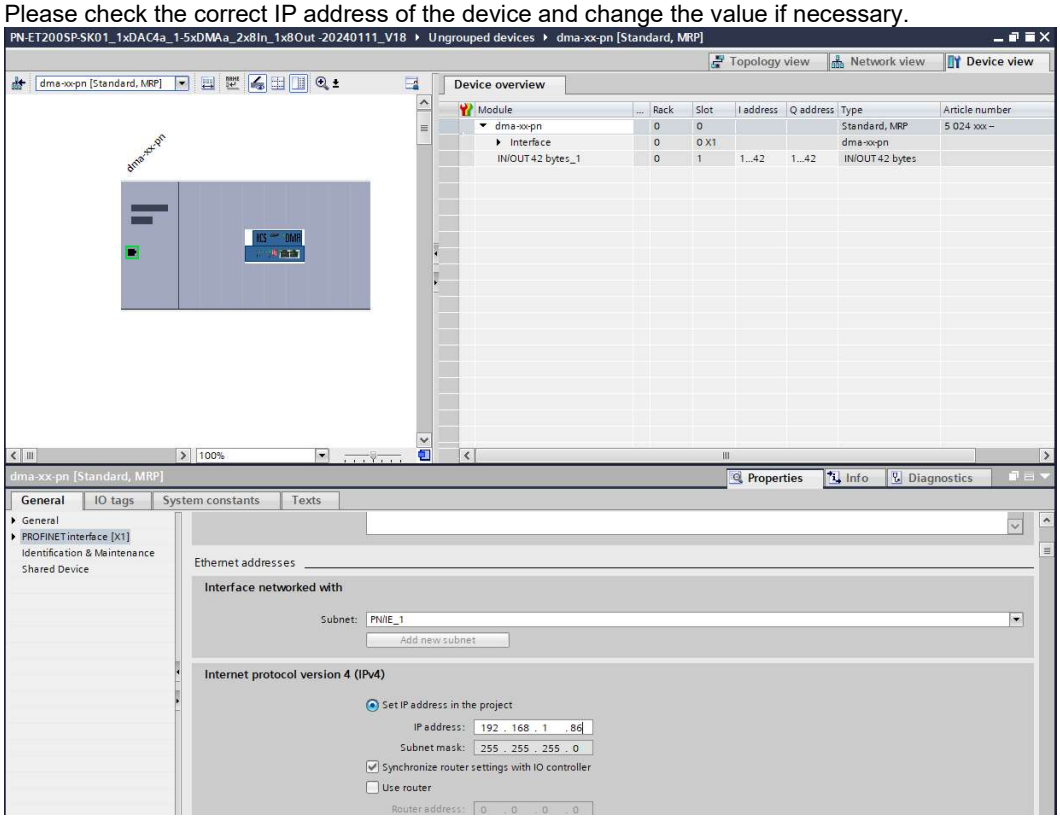

9.4.4 CMD 3, Reading values from one DMA-2 node

Every DMA-2 module connected to the Profinet node has an own SNUM (slave number). Together with this number it is possible to read an set of parameter of this specific DMA-2.
The parameter-ID's are shown in table □ Chapter "10 List of parameters", page 65

An reading access is done as followed:

- Define the slave number SNUM of the DMA-2 from which the parameters are to be read.

SNUM	Int

E.g. for slave 1 #SNUM := 1;.

- Setup the CMD: # CMD := 3;

CMD	Int

- Write the starting address of the first parameter ID which should be read by the structure

IN_CMD3	Struct
PAR_ID	Int

E.g. parameter 22, S1.01 #IN_CMD3.PAR_ID := 22;

- Define the number of parameters to be read (maximum 8).

IN_CMD3	Struct
PAR_ID	Int
PAR_N	Int

E.g. 4 parameters S1.01..S1.04 #IN_CMD3.PAR_N := 4;

- Definition of the states in #CMD3_STAT:

CMD_UNSED	Int		0
CMD_START	Int		1
CMD_PROGRESS	Int		2
CMD_FINISH	Int		4
CMD_FAIL	Int		8

0: no action
1: Start of reading
2: Reading in process
4: Reading finished
8: Reading error occurred.

- Start the process, by writing #CMD3_STAT := 1; (CMD_START)

CMD3_STAT	Int

- When #CMD3_STAT reaches the value 4 (CMD_FINISH), Reading is finished, and the values can be read in the structure #OUT_CMD.VALUE[1..8]. In addition the number of received bytes will be shown I the structure #OUT_CMD.CNT. Every read parameter needs to 2 bytes.

OUT_CMD3	Struct
CNT	Int
VALUE	Array[1..8] of Int
VALUE[1]	Int
VALUE[2]	Int
VALUE[3]	Int

- If an reading error occurred, the reason for the error can be analyzed by checking the #COM_xxxxx outputs of the function block.

COM_ERROR	Bool
COM_NUM	Int
COM_EXCE	Int

9.4.5 CMD 6, Writing Parameters to one DMA-2 node

The written values are stored in a non-volatile memory.
Every DMA-2 module connected to the Profinet node has an own SNUM (slave number). Together with this number it is possible to write an new parameter value to the parameter ID of this specific DMA-2.
The parameter-ID's are shown in table □ Chapter "10 List of parameters", page 65

An parameter writing access is done as followed:

- Define the slave number SNUM of the DMA-2 whose parameters are to be changed.

SNUM	Int

E.g. for slave 1 #SNUM := 1;.

- Setup the CMD: # CMD := 6;

CMD	Int

- Define the parameter ID and the value which should be changed.

IN_CMD6	Struct
PAR_ID	Int
PAR_VALUE	Int

E.g. parameter 22, S1.01 =1000 (1.0 V) #IN_CMD3.PAR_ID := 22;
#IN_CMD3.PAR_VALUE := 1000;

- Definition of the states in #CMD6_STAT:

CMD_UNSED	Int		0
CMD_START	Int		1
CMD_PROGRESS	Int		2
CMD_FINISH	Int		4
CMD_FAIL	Int		8

0: no action
1: Start of writing
2: Writing in process
4: Writing finished
8: Writing error occurred.

- Start the process, by writing #CMD6_STAT := 1; (CMD_START)

CMD6_STAT	Int

- When #CMD6_STAT reaches the value 4 (CMD_FINISH), writing is finished

- If an writing error occurred, the reason for the error can be analyzed by checking the #COM_xxxxx outputs of the function block.

COM_ERROR	Bool
COM_NUM	Int
COM_EXCE	Int

9.4.6 CMD 15, Writing and Reading once to all connected DMA nodes

The CMD 15 makes it possible to send and receive process data from all DMAs connected to the Profinet node. In this case, the variable SNUM (slave number) contains the maximum number of connected DMA-2s. (deviating from CMD 3 or CMAD6).
The meaning of the process values depending on the mode of the DMA-2 working at.
See □ Chapter “7.5 CMD = 15, structure of Profinet telegram definition, depending on SW Versions“, page 43

This also may be different to each module due to the DMA-2 fold composition. Also, the Control-Byte is depending on the working mode. Explanation of the bits
see □ Chapter “7.5.1.3 Explanation of special functions and module state bits“, page 44

An CMD 15 access is done as followed:

- Define the number of slaves SNUM of the modules connected to the Profinet node.

SNUM	Int

E.g. If using a 3-fold DMA-2 #SNUM := 3;.

- Setup the CMD: # CMD := 15;

CMD	Int

- Write the process data you want to send to the DMA-2 modules in the structure provided. The array index corresponds to the SADR (parameter E 22) of the connected modules

IN_CMD15	Array[1..5] of Struct
IN_CMD15[1]	Struct
IN_CMD15[2]	Struct
IN_CMD15[3]	Struct
IN_CMD15[4]	Struct
IN_CMD15[5]	Struct

Module with SADR = 1 (parameter E22 = 1)

Module with SADR = 5 (parameter E22 = 5)

Structure of the transmit data set:

Standard SW

IN_CMD15	Array[1..5] o
IN_CMD15[1]	Struct
BUS_DISABLE	Bool
Din_1	Bool
Din_2	Bool
TST_CMP	Bool
CNTRL_1	Bool
CNTRL_2	Bool
CNTRL_3	Bool
CNTRL_4	Bool
VALUE1	Int
VALUE2	Int

Special SW for Mode2.
The bits Din_1 and Din_2 are used for control the separate Enable

IN_CMD15	Array[1..5] of Struct
IN_CMD15[1]	Struct
BUS_DISABLE	Bool
Enable_1	Bool
Enable_2	Bool
TST_CMP	Bool
CNTRL_1	Bool
CNTRL_2	Bool
CNTRL_3	Bool
CNTRL_4	Bool
VALUE1	Int
VALUE2	Int

Control Byte

Process values to DMA

- The internal telegram address is changed automatically so an return telegram is initiating every function block call. The array index corresponds to the SADR (parameter E 22) of the connected modules
Structure of the receive data set.

Standard SW

OUT_CMD15	Array[1..5] o...
OUT_CMD15[1]	Struct
HW_ENABLE	Bool
BUS_DISABLE	Bool
STAT_1	Bool
STAT_2	Bool
STAT_3	Bool
STAT_4	Bool
STAT_5	Bool
ERROR	Bool
ERROR_NO	Byte
Din_1	Bool
Dout_1	Bool
DKOMP_1	Bool
DKOMP_11	Bool
Din_2	Bool
Dout_2	Bool
DKOMP_2	Bool
DKOMP_22	Bool
VALUE1	Int
VALUE2	Int

Special SW for Mode2.
The bits Din_1 and Din_2 are used to display the separate Enable setting

DMA_OUT_CMD15	Array[1..5] of Struct
DMA_OUT_CMD1...	Struct
HW_ENABLE	Bool
BUS_DISABLE	Bool
STAT_1	Bool
STAT_2	Bool
STAT_3	Bool
STAT_4	Bool
STAT_5	Bool
ERROR	Bool
ERROR_NO	Byte
Enable_1	Bool
Dout_1	Bool
DKOMP_1	Bool
DKOMP_11	Bool
Enable_2	Bool
Dout_2	Bool
DKOMP_2	Bool
DKOMP_22	Bool
VALUE1	Int
VALUE2	Int

Status Word

Process values from DMA

- If an error has occurred, the cause of the error can be analyzed by evaluating the outputs #COM_xxxxx of the function block.

■	COM_ERROR	Bool
■	COM_NUM	Int
■	COM_EXCE	Int

10 List of parameters

Parameters in grey letters are not yet implemented in the DMA Software.
All values in decimal, for usage as data values they must be converted into Hex
R = read only parameter.
X = implemented, but not active (no access)
W/R = writing and reading possible.

ID_{Hex}	ID_{dec}	W/R	Name	Function	Unit	Min	Max	Def	Description
0x00	0	R	Vers	Software version	---	xx.xx	xx.xx	10.01	Depends on HW and SW version
0x01	1	R	d1.01	Sum of analogue set value	V	-9999	9999	-	-1000 == -1.000 V; 1000 == 1.000 V
0x02	2	R	d1.02	Sum of all post ramp set values	V	-9999	9999	-	
0x03	3	R	d1.03	Set values after linearization	V	-9999	9999	-	
0x04	4	R	d1.04	Value after gain adjustment.	V	-9999	9999	-	
0x05	5	R	d1.05	Signal A	V	-9999	9999	-	
0x06	6	R	d1.06	Signal B	V	-9999	9999	-	
0x07	7	R	d1.07	Current A	A	0	5000	-	1000 == 1.000 A
0x08	8	R	d1.08	Current B	A	0	5000	-	
0x09	9	R	d1.09	Total current	A	0	5000	-	
0x0A	10	R	d1.10	Desired value	V	-9999	9999	-	-1000 == -1.000 V; 1000 == 1.000 V
0x0B	11	R	d1.11	Actual value, feedback value	V	-9999	9999	-	
0x0C	12	R	d1.12	Lag error	V	-9999	9999	-	
0x0D	13	R	d1.13	Controller output	V	-9999	9999	-	
0x0E	14	R	d2.01	Sum of analogue set value	V	-9999	9999	-	
0x0F	15	R	d2.02	Sum of all post ramp set values	V	-9999	9999	-	
0x10	16	R	d2.03	Set values after linearization	V	-9999	9999	-	
0x11	17	R	d2.04	Value after gain adjustment.	V	-9999	9999	-	
0x12	18	R	d2.10	Desired value	V	-9999	9999	-	
0x13	19	R	d2.11	Actual value, feedback value	V	-9999	9999	-	
0x14	20	R	d2.12	Lag error	V	-9999	9999	-	
0x15	21	R	d2.13	Controller output	V	-9999	9999	-	
0x16	22	R/W	S1.01	Set Value1	V	-9999	9999	0	
0x17	23	R/W	S1.02	Set Value2	V	-9999	9999	0	
0x18	24	R/W	S1.03	Set Value3	V	-9999	9999	0	
0x19	25	R/W	S1.04	Set Value4	V	-9999	9999	0	
0x1A	26	---	S1.08	reserved		---	---	---	---
0x1B	27	R/W	r1.01	Ramp from 0 ⇒ -	s	0	3950	0	1 == 10ms 0 == Ramp function off
0x1C	28	R/W	r1.02	Ramp from – ⇒ 0	s	0	3950	0	
0x1D	29	R/W	r1.03	Ramp from 0 ⇒ +	s	0	3950	0	
0x1E	30	R/W	r1.04	Ramp from + ⇒ 0	s	0	3950	0	
0x1F	31	R/W	A1.01	Profinet set value (Branch 1)	V	-9999	9999	0	-1000 == -1.000 V; 1000 == 1.000 V This value is, when written, always active. Cleared by reset, or writing “0”. For switching off of the analogue set-value, set E17 = “2”
0x20	32	R/W	A1.02	Profinet feedback value (Branch 1)	V	-9999	9999	0	-1000 == -1.000 V; 1000 == 1.000 V C1.09 has to be switched off in order to avoid interferences
0x21	33	R/W	S2.01	Set Value1 (Branch 2)	V	-9999	9999	0	-1000 == -1.000 V; 1000 == 1.000 V
0x22	34	R/W	S2.02	Set Value2 (Branch 2)	V	-9999	9999	0	
0x23	35	R/W	r2.01	Ramp from 0 ⇒ -	s	0	3950	0	1 == 10ms 0 == Ramp function off
0x24	36	R/W	r2.02	Ramp from – ⇒ 0	s	0	3950	0	
0x25	37	R/W	r2.03	Ramp from 0 ⇒ + (Branch 2)	S	0	3950	0	
0x26	38	R/W	r2.04	Ramp from + ⇒ 0 (Branch 2)	S	0	3950	0	
0x27	39	R/W	A2.01	Profinet set value (Branch 2)	V	-9999	9999	0	-1000 == -1.000 V; 1000 == 1.000 V This value is, when written, always active. Cleared by reset, or writing “0”. For switching off of the analogue set-value, set E17 = “2”
0x28	40	R/W	A2.02	Profinet feedback value (Branch 2)	V	-9999	9999	0	-1000 == -1.000 V; 1000 == 1.000 V C2.09 has to be switched off in order to avoid interferences
0x29	41	R/W	C1.00	Controller selection	---	0	4	1	0 = off 1 = P-PT_1-I-DT_1 2 =Remote 3 =dff 4 =Remote + dff
0x2A	42	R/W	C1.01	Safety function	---	0	1	0	0 = off; 1 = on
0x2B	43	R/W	C1.02	Linearization	---	0	6	0	0 = linear 1 ... 5 = standard curves 6 = customized curve

ID_{Hex}	ID_{dec}	W/R	Name	Function	Unit	Min	Max	Def	Description
0x2C	44	R/W	C1.03	Gain A	V/V	0	200	100	100 == Factor 1.00
0x2D	45	R/W	C1.04	Gain B	V/V	0	200	100	100 == Factor 1.00
0x2E	46	R/W	C1.05	Set value sign and gain	V/V	-400	400	100	100 == Factor 1.00 Sign and gain!
0x2F	47	R/W	C1.06	Set value offset	V	-9999	9999	0	-1000 == -1.000 V; 1000 == 1.000 V
0x30	48	R/W	C1.07	Dead band compensation A	V	0	9999	0	1000 == 1.000 V
0x31	49	R/W	C1.08	Dead band compensation B	V	0	9999	0	9.999 V = max. current depending on solenoid selection
0x32	50	R/W	C1.09	Sensor type Attention: No negative controller output possible when 10, 11 or 12 is selected!	---	1	28	4	off = Deactivated 1 = 0...20mA 2 = 4...20mA 3 = 12mA +-8mA 4 = 0...10V 5 = 0...+-10V 6 = 6V +-2.5V 7 = 7.5V +-2.5V 8 = 6V +-4V 9 = reserved 10 = 0..20mA (positive contr. outp. only) 11 = 4..20mA (positive contr. outp. only) 12 = 0..10V (positive contr. outp. only) 13 = reserved 14 = 5V+-3.0V 15..20 = reserved 21 = Bipolar voltage semiautomatic calibration 22 = Unipolar voltage semiauto. calibration 23 = Unipolar volt. semiauto. calibration (positive contr. outp. only) 24 = Bipolar (internal) current semiauto. calibration 25 = Unipolar current semiauto. calibration 26 = Unipolar current semiauto. calibration (positive contr. outp. only) 27 = reserved 28 = 5V+-2.6V
0x33	51	R/W	C1.10	Actual value gain	V/V	0	400	100	100 == Factor 1.00
0x34	52	R/W	C1.11	Actual value offset	V	-9999	9999	0	-1000 == -1.000 V; 1000 == 1.000 V
0x35	53	R/W	C1.12	Actual value sign	---	- 1	+ 1	1	- 1 = negative 0 = off + 1 = positive
0x36	54	R/W	C1.13	P-Portion K_{P1}	V/V	0	400	0	100 == Factor 1.00
0x37	55	R/W	C1.14	T-Portion for PT1 (to C1.16)	S	0	1000	0	100 == 1.00
0x38	56	R/W	C1.15	Threshold (C1.13, C1.16)	V	0	9999	9999	1000 == 1.000 V
0x39	57	R/W	C1.16	P-Portion K_{P2}	V/V	0	400	0	100 == Factor 1.00
0x3A	58	R/W	C1.17	I-Portion	V/s	0	4000	0	1000 == 1.000
0x3B	59	R/W	C1.18	D-Portion	Vs	0	400	0	100 == 1.00
0x3C	60	R/W	C1.19	T-Portion for DT1	S	0	1000	0	100 == 1.00
0x3D	61	R/W	C1.20	Gain (C1.13 and C1.16)	V/V	1	32	1	2 = Factor 2.00
0x3E	62	R/W	C1.21	Comparator upper level	V	-9999	9999	0	-1000 == -1.000 V; 1000 == 1.000 V
0x3F	63	R/W	C1.22	Comparator lower level	V	-9999	9999	0	
0x40	64	R/W	C1.23	Comparator delay into window	S	0	9999	0	1 == 10 ms
0x41	65	R/W	C1.24	Comparator delay out of window	S	0	9999	0	0 == no delay
0x42	66	R/W	C1.25	Comparator selection COMP_1	---	0	3	0	0 = off 1 = Set value 2 = Actual value 3 =Lag error
0x43	67	R/W	C1.26	Cable fracture detection feedback	---	0	1	0	0 = off; 1 = active
0x44	68	R/W	C2.00	Controller selection	---	0	4	0	0 = off 1 = P-PT_1-I-DT_1 2 =Remote 3 =dff 4 =Remote + dff
0x45	69	R/W	C2.01	Safety function	---	0	1	0	0 = off; 1 = on
0x46	70	R/W	C2.02	Linearization	---	0	6	0	0 = linear 1 ... 5 = standard curves 6 = customized curve
0x47	71	R/W	C2.03	Gain A	V/V	0	200	100	100 == Factor 1.00
0x48	72	R/W	C2.04	Gain B	V/V	0	200	100	100 == Factor 1.00
0x49	73	R/W	C2.05	Set value sign and gain	V/V	-400	400	100	100 == Factor 1.00 Sign and gain!

ID_{Hex}	ID_{dec}	W/R	Name	Function	Unit	Min	Max	Def	Description
0x4A	74	R/W	C2.06	Set value offset	V	-9999	9999	0	-1000 == -1.000 V; 1000 == 1.000 V
0x4B	75	R/W	C2.07	Dead band compensation A	V	0	9999	0	1000 == 1.000 V
0x4C	76	R/W	C2.08	Dead band compensation B	V	0	9999	0	9.999 V = max. current depending on solenoid selection
0x4D	77	R/W	C2.09	Sensor type Attention: No negative controller output possible when 10, 11 or 12 is selected!	---	0	12	4	off = Deactivated 1 = 0...20mA 2 = 4...20mA 3 = 12mA +-8mA 4 = 0...10V 5 = 0...+-10V 6 = 6V +-2.5V 7 = 7.5V +-2.5V 8 = 6V +-4V 9 = reserved 10 = 0..20mA (positive contr. outp. only) 11 = 4..20mA (positive contr. outp. only) 12 = 0..10V (positive contr. outp. only) 13 = reserved 14 = 5V+-3.0V 15..27 = reserved 28 = 5V+-2.6V
0x4E	78	R/W	C2.10	Actual value gain	V/V	0	400	100	100 == Factor 1.00
0x4F	79	R/W	C2.11	Actual value offset	V	-9999	9999	0	-1000 == -1.000 V; 1000 == 1.000 V
0x50	80	R/W	C2.12	Actual value sign	---	- 1	+ 1	1	- 1 = negative 0 = off + 1 = positive
0x51	81	R/W	C2.13	P-Portion K_{P1}	V/V	0	400	0	100 == Factor 1.00
0x52	82	R/W	C2.14	T-Portion for PT1 (to C1.16)	S	0	1000	0	100 == 1.00
0x53	83	R/W	C2.15	Threshold (C1.13, C1.16)	V	0	9999	9999	1000 == 1.000 V
0x54	84	R/W	C2.16	P-Portion K_{P2}	V/V	0	400	0	100 == Factor 1.00
0x55	85	R/W	C2.17	I-Portion	V/s	0	4000	0	1000 == 1.000
0x56	86	R/W	C2.18	D-Portion	Vs	0	400	0	100 == 1.00
0x57	87	R/W	C2.19	T-Portion for DT1	S	0	1000	0	100 == 1.00
0x58	88	R/W	C2.20	Gain (C1.13 and C1.16)	V/V	1	32	1	2 = Factor 2.00
0x59	89	R/W	C2.21	Comparator upper level	V	-9999	9999	0	-1000 == -1.000 V; 1000 == 1.000 V
0x5A	90	R/W	C2.22	Comparator lower level	V	-9999	9999	0	
0x5B	91	R/W	C2.23	Comparator delay into window	S	0	9999	0	1 == 10 ms
0x5C	92	R/W	C2.24	Comparator delay out of window	S	0	9999	0	0 == no delay
0x5D	93	R/W	C2.25	Comparator selection COMP_2	---	0	3	0	0 = off 1 = Set value 2 = Actual value 3 =Lag error
0x5E	94	R/W	C2.26	Cable fracture detection feedback	---	0	1	0	0 = off; 1 = active
0x5F	95	R	E00	Operation mode (depends on HW + SW version)	---	1	11	3	1 = Open loop one valve 2 = Open loop two valves 3 = Closed loop one valve 4 = Closed loop on application 6 = Closed loop valve/application 8 = Closed loop application/ application 10 = Controller function only, one feedback 11 = Controller function only, two feedback
0x60	96	R/W	E01	Analogue output (depends on HW + SW version)	---	1 and 14	13 and 21	1	1 = d1.01 to 13 = d1.13 and 14 = d2.01 to 21 = d2.13
0x61	97	R/W	E02	Push-Pull function (depends on HW + SW version)	---	0	1	0	0 = off v(no push pull) 1 = active 2 = common “+” for solenoids (Remark: only for max 0,8 A current) 3 = full bridge 4 = off + detection low current to solenoid 5 = active + detection low current to solenoid
0x62	98	R/W	E03 E1.03	Solenoid selection Solenoid selection A (depends on HW + SW version)	---	1	7	6	Standard solenoid definition 1 = 0,8 A 2 = 1,1 A 3 = 1,3 A 4 = 1,6 A 5 = 2,4 A 6 = 2,7 A 7 = 3,5 A (depends on HW + SW version)

ID_{Hex}	ID_{dec}	W/R	Name	Function	Unit	Min	Max	Def	Description
0x63	99	R	E04 E1.04	P-Portion current contr. Energization A	---	500	9999	500	Default for 2,700 A solenoid
0x64	100	R	E05 E1.05	I-Portion current contr. Energization A	---	500	9999	500	
0x65	101	R	E06 E1.06	P-Portion cur. contr. de- energization A	---	1300	9999	1300	
0x66	102	R	E076 E1.07	I-Portion cur. contr. De- energization A	---	500	9999	500	
0x67	103	R/W	E08	Ramp selection	---	1	2	1	0 = digital set v. (time constant) 1 = all set v. (rise constant.) 2 = selectable ramps
0x68	104	R/W	E09	Time delay enable signal	s	0	9999	0	1000 = 1.00s
0x69	105	R/W	E10 E1.10	Solenoid current adaptation A	---	50	110	100	Variable adjustment of max. current 100 == Factor 1.00
0x6A	106	R/W	E11	Initial current solenoid A	V	0	9999	0	3.000 V = 30 % of max. rated current
0x6B	107	R/W	E12	Initial current solenoid B	V	0	9999	0	
0x6C	108	R/W	E13 E1.13	Dither Amplitude A	V	0	3000	0	
0x6D	109	R/W	E14 E1.14	Dither Frequency A	Hz	1	300	0	---
0x6E	110	R/W	E15	Selection set point S1.06 (U/I)	---	0	11	1	off = Deactivated 1 = Voltage -10V..+10V 2 = Voltage 0..10V 3 = Voltage 5V+-5V 4 = Voltage 5V+-4.5V w/o signal observation 5 = Voltage 5V+-4.5V with signal observation 6 = 0..20mA w/o cable fract. det. 7 = 10+-10mA w/o cable fract. det. 8 = 4..20mA w/o cable fract. det. 9 = 4..20mA with cable fract. det. 10 = 12+-8mA w/o cable fract. det. 11 = 12+-8mA with cable fract. det.
0x6F	111	R/W	E16	Reserved	---	---	---	---	---
0x70	112	R/W	E17	Set value activation mode	---	0	2	0	0 = digital and analog set value input active 1 = reserved 2 = only digital set value input active
0x71	113	R/W	E18	Error/Comparator Output	---	0	8	0	0 = Error 1 = Comp_1 positive logic 2 = Comp_1 negative logic 3 = Comp_2 positive logic 4 = Comp_2 negative logic 5 = Dout_1 positive logic 6 = Dout_1 negative logic 7 = Dout_2 positive logic 8 = Dout_2 negative logic 9 = Output is controlled by bus bit:
0x72	114	R/W	E19	Factor for analog output (depends on HW + SW version)	V/V	-400	400	100	100 == Factor 1.00 Sign and gain!
0x73	115	X	E20	Reserved	---	---	---	---	
..	..								
0x9B	155	R/W	E2.03	Solenoid selection Solenoid selection B (depends on HW + SW version)	---				Standard solenoid definition 1 = 0,8 A 2 = 1,1 A 3 = 1,3 A 4 = 1,6 A 5 = 2,4 A 6 = 2,7 A 7 = 3,5 A (depends on HW + SW version)
0x9C	156	R	E2.04	P-Portion current contr. Energization B	---	0	9999	500	Default for 2,700 A solenoid
0x9D	157	R	E2.05	I-Portion current contr. Energization B	---	0	9999	500	
0x9E	158	R	E2.06	P-Portion cur. contr. De-energization B	---	0	9999	1300	
0x9F	159	R	E2.07	I-Portion cur. contr. De-energization B	---	0	9999	500	
0xA0	160	R/W	E2.10	Solenoid current adaption B	---	50	110	100	Variable adjustment of max. current 100 == Factor 1.00
0xA1	161	R/W	E2.13	Dither Amplitude B	V	0	300	0	
0xA2	162	R/W	E2.14	Dither Frequency B	Hz	0	300	0	
0xA3	163	R/W	E 22	Profinet Slave Address	---	0	32	0	0 = No bus function 1 = Standard Profinet 2..5 = Multiple Slave Profinet
0xA4	164	R/W	C1.27	Hysteresis command A	V	-9999	9999	0	-1000 == -1.000 V; 1000 == 1.000 V

ID_{Hex}	ID_{dec}	W/R	Name	Function	Unit	Min	Max	Def	Description
0xA5	165	R/W	C2.27	Hysteresis command B	1	-9999	9999	0	
0xA6	166	R/W	C1.28	Comparator upper level	V	-9999	9999	0	-1000 == -1.000 V; 1000 == 1.000 V
0xA7	167	R/W	C1.29	Comparator lower level	V	-9999	9999	0	
0xA8	168	R/W	C1.30	Comparator delay into window	S	0	9999	0	1 == 10 ms
0xA9	169	R/W	C1.31	Comparator delay out of window	S	0	9999	0	0 == no delay
0xAA	170	R/W	C1.32	Comparator selection Comp_11	---	0	3	0	0 = off 1 = Set value 2 = Actual value 3 =Lag error
0xAB	171	R/W	C2.28	Comparator upper level	V	-9999	9999	0	-1000 == -1.000 V; 1000 == 1.000 V
0xAC	172	R/W	C2.29	Comparator lower level	V	-9999	9999	0	
0xAD	173	R/W	C2.30	Comparator delay into window	S	0	9999	0	1 == 10 ms
0xAE	174	R/W	C2.31	Comparator delay out of window	S	0	9999	0	0 == no delay
0xAF	175	R/W	C2.32	Comparator selection Comp_22	---	0	3	0	0 = off 1 = Set value 2 = Actual value 3 =Lag error
0xB0	176	R/W	E Int	Internal Digital Switches (Read/Set)	---	0	0xFFFF		0x0001 = Din_1 active (Read/Write) 0x0002 = Dout_1 active (Read only) 0x0004 = Comp_1 active (Read only) 0x0008 = Comp_11 active (Read only) 0x0010 = Din_2 active (Read/Write) 0x0020 = Dout_2 active (Read only) 0x0040 = Comp_2 active (Read only) 0x0080 = Comp_22 active (Read only) 0x0100 = Input SP1 active (Read only) 0x0200 = Input SP2 active (Read only) 0x0400 = Enable active (Read only) 0x0800 = Error active (Read only) 0x1000 = Input SP3 active (Read only) 0x2000 = Input SP4 active (Read only) 0x8000 = Bus Disable Card (Read/Write)
0xB1	177	R/W	E 23	Profinet telegram timeout window	S	0	9999	0	0 == function deactivated 1 == 10 ms
0xB2	178	R/W	E 26	Profinet Timeout Error handling	---	0	1	0	0 = Blinking Enable Led shows Profinet timeout 1 = Profinet timeout causes error.
0xB3	179	R/W	C1.33	I-portion limitation	V	0	9999		0 == 0.000 V; 9999 == 9.999 V
0xB4	180	R/W	C2.33	I-portion limitation	V	0	9999		0 == 0.000 V; 9999 == 9.999 V
..	..								
0xD4	212	R/W	E 33	Offset for analog output (depends on HW + SW version)	V	-9999	9999	0	-1000 == -1.000 V; 1000 == 1.000 V
..	..								
0xDA	218	R/W	C1.36	Sensor signal correction factor for signal < 0. branch 1	V/V	-100	100	100	100 == Factor 1.00
0xDB	219	R/W	C2.36	Sensor signal correction factor for signal < 0. branch 2	V/V	-100	100	100	100 == Factor 1.00
0xDC	220	R/W	C1.37	Spool overlap compensation A	V	0	9999	0	1000 == 1.000 V
0xDD	221	R/W	C1.38	Spool overlap compensation B	V	0	9999	0	9.999 V = max. current depending on solenoid selection
0xDE	222	R/W	C2.37	Spool overlap compensation A	V	0	9999	0	1000 == 1.000 V
0xDF	223	R/W	C2.38	Spool overlap compensation B	V	0	9999	0	9.999 V = max. current depending on solenoid selection
..	..								
0xE5	229	R/W	C1.41	Hysteresis threshold for resetting the I regulation value (the function is deactivated at 0.00)	V	0	9999	0	1000 == 1.000 V
0xE6	230	R/W	L1.x0	Linearization curve branch 1 [0,0]	V	0	0	0	1000 == 1.000 V
0xE7	232	R/W	L1.y0	Linearization curve [0,0]	V	0	9999	0	
0xE8	232	R/W	L1.x1	Linearization curve [1,1]	V	0	9999	1250	
0xE9	233	R/W	L1.y1	Linearization curve [1,1]	V	0	9999	1250	
0xEA	234	R/W	L1.x2	Linearization curve [2,2]	V	0	9999	2500	
0xEB	235	R/W	L1.y2	Linearization curve [2,2]	V	0	9999	2500	
0xEC	236	R/W	L1.x3	Linearization curve [3,3]	V	0	9999	3750	
0xED	237	R/W	L1.y3	Linearization curve [3,3]	V	0	9999	3750	
0xEE	238	R/W	L1.x4	Linearization curve [4,4]	V	0	9999	5000	
0xEF	239	R/W	L1.y4	Linearization curve [4,4]	V	0	9999	5000	
0xF0	240	R/W	L1.x5	Linearization curve [5,5]	V	0	9999	6250	
0xF1	241	R/W	L1.y5	Linearization curve [5,5]	V	0	9999	6250	
0xF2	242	R/W	L1.x6	Linearization curve [6,6]	V	0	9999	7500	
0xF3	243	R/W	L1.y6	Linearization curve [6,6]	V	0	9999	7500	

ID_{Hex}	ID_{dec}	W/R	Name	Function	Unit	Min	Max	Def	Description
0xF4	244	R/W	L1.x7	Linearization curve [7,7]	V	0	9999	8750	
0xF5	245	R/W	L1.y7	Linearization curve [7,7]	V	0	9999	8750	
0xF6	246	R/W	L1.x8	Linearization curve [8,8]	V	0	9999	9999	
0xF7	247	R/W	L1.y8	Linearization curve [8,8]	V	9999	9999	9999	
0xF8	248	R/W	L2.x0	Linearization curve branch 2 [0,0]	V	0	0	0	1000 == 1.000 V
0xF9	249	R/W	L2.y0	Linearization curve [0,0]	V	0	9999	0	
0xFA	250	R/W	L2.x1	Linearization curve [1,1]	V	0	9999	1250	
0xFB	251	R/W	L2.y1	Linearization curve [1,1]	V	0	9999	1250	
0xFC	252	R/W	L2.x2	Linearization curve [2,2]	V	0	9999	2500	
0xFD	253	R/W	L2.y2	Linearization curve [2,2]	V	0	9999	2500	
0xFE	254	R/W	L2.x3	Linearization curve [3,3]	V	0	9999	3750	
0xFF	255	R/W	L2.y3	Linearization curve [3,3]	V	0	9999	3750	
0x100	256	R/W	L2.x4	Linearization curve [4,4]	V	0	9999	5000	
0x101	257	R/W	L2.y4	Linearization curve [4,4]	V	0	9999	5000	
0x102	258	R/W	L2.x5	Linearization curve [5,5]	V	0	9999	6250	
0x103	259	R/W	L2.y5	Linearization curve [5,5]	V	0	9999	6250	
0x104	260	R/W	L2.x6	Linearization curve [6,6]	V	0	9999	7500	
0x105	261	R/W	L2.y6	Linearization curve [6,6]	V	0	9999	7500	
0x106	262	R/W	L2.x7	Linearization curve [7,7]	V	0	9999	8750	
0x107	263	R/W	L2.y7	Linearization curve [7,7]	V	0	9999	8750	
0x108	264	R/W	L2.x8	Linearization curve [8,8]	V	0	9999	9999	
0x109	265	R/W	L2.y8	Linearization curve [8,8]	V	9999	9999	9999	
..	..								

Table 9: Parameter list

11 Troubleshooting

11.1 General

The status LED in the Front of the DMA don't lit: or

=> Are all modules supplied with power? (Supply 24V / Supply 0V)
To be sure the power is applied, disconnect the USB interface!

The status LED at the slave module don't lit yellow:

=> Is the Enable input powered with 24 V?
=> Is the Software enable switched off? (See the special byte in CMD-15-mode)

The current of the solenoid did not reach the desired value:
=> Could the power supply provide enough power?
=> Is the selected type of solenoid type correct?

The status LED of one of the DMA slave modules show red color:

=> The slave module is in error state.
=> To acknowledge this error, the enable signal of the module must be switched off/on - Then the error should disappear.

11.2 No Profinet communication is possible

THE RED LED "BUS ERROR" IS LIT:

=> Check the wiring of the Profinet (termination, length of cables, connectors)

The "universal module" is used in PLC-project:
=> This is not allowed, only the module listed in GDS-file are supported. (The universal module is automatically displayed in the S7 configurator, please not chose this one)

11.3 Communication ok, but current outputs are inactive

Could the set point/feedback-value be monitored by the DMA module? (parameter d1.11, d1.01, d1.02):

Yes => Please check the setting of the Ex.xx, Cx.xx parameters.
Check also the “Bus slave address” E22 of each module.

No => Apply a manual signal to the analogue inputs, please be sure that the parameter E17 is set to “off”.
Otherwise analogue inputs would be ignored.

Are the set point/feedback-value now visible?

Yes => The PLC don’t send a correct telegram. Please check you PLC program, and modify the PLC commands in your program.

No => Check general errors, see □ Chapter “11.1 General”, page 70.

11.4 PNO Certificate

PROFIBUS • PROFINET

Certificate

PROFIBUS Nutzerorganisation e.V. grants to

HCS Hydraulic Control Systems GmbH
Neuffener Str. 29, 72636 Frickenhausen, Germany

the Certificate No: **Z01871** for the PROFIBUS device:

Model Name:	**DMA-22-VPC3**
Revision:	**V2.4; SW/FW: V0103a; HW: revision 02**
GSD:	**HCS0EA7.GSD, File Version: V2.4 17.01.2014**

This certificate confirms that the product has successfully passed the certification tests with the following scope:

☑	DP-V0	MS0, Sync, Freeze, Fail_Safe, Set_Slave_Add
☑	DP-V1	MS1, MS2, I&M
☑	Physical Layer	RS485

Test Report Number: **FZI0001**
Authorized Test Laboratory: **FZI Forschungszentrum Informatik, Karlsruhe, Germany**

The tests were executed in accordance with the following documents:
"Test Specifications for PROFIBUS DP Slaves, Version 3.09, September 2008".
This certificate is granted according to the document:
"Framework for testing and certification of PROFIBUS and PROFINET products".
For all products that are placed in circulation by July 14, 2017 the certificate is valid for life.

(Official in Charge)

Board of PROFIBUS Nutzerorganisation e. V.

(Karsten Schneider)

(K.-P. Lindner)

12 Declaration of Conformity

EC Declaration of Conformity in accordance with EMC Directive 2014/30/EU

HCS Hydraulic Control Systems GmbH
Neuffener Str. 29
D-72636 Frickenhausen

Hereby declares that the product described as follows complies in terms of its design, as well as in the version placed in the stream of commerce by us, with the relevant requirements of the directive. This declaration is void in the event of any change to the product without our written agreement.

Product:	Digital Amplifier and Controller Module
Intended use	Automation systems (industrial applications)
Model:	**DMA-22(A)-x**
Rated voltage:	24 V DC; SELV, PELV
Rated power:	max. 100 VA
Protection class:	III
Protection degree:	IP00 (IP20 on request)
Relevant EU Directive:	EMC Directive 2014/30/EU
Applicable EU Standards:	
Emissions:	EN 61000-6-4:2007 + A1:2011; EN 61000-6-3:2007 + A1:2011
Immunity:	EN 61000-6-2: 2019

Date/manufacturers signature

15.01.2024
Details of signatory: Dipl.-Ing. (FH) Peter Deuschle (General Manager)

13 Notes:

14 HCS distributors and partners

Please refer to:

https://www.h-c-s-gmbh.de/en/sales-partners

on our web side.

- End -