Neuffener Strasse 29
D-72636 Frickenhausen
Tel: (+49) 7025 - 911 007
Fax: (+49) 7025 - 911 008
Email: info@h-c-s-gmbh.de
www.h-c-s-gmbh.de

HCS
HYDRAULIC CONTROL SYSTEMS

THE ART OF CONTROL

Universal Digital Module Amplifier
for DIN Mounting Rail (Top-Hat Rail)

DMA-22 WITH BUS INTERFACES

VERSIONS FOR OPEN/CLOSED LOOP APPLICATIONS
FOR ALL KINDS OF VALVES W/WO FEEDBACK SYSTEMS

- **Available bus interfaces: PPROFIBUS, PROFINET, ETHERNET/IP, CAN-OPEN)**
- **Multi module configurations available**
- **For all kind of valves with/wo feedback or also process value feedback**
- **Optional 10 V outp. for feedback sensors**
- **Optional analogue output 0.... +- 10 V**
- **Special Hawe valve versions available**
- **Full digital PI current controller**
- **Full digital multifunctional controller for valve or process control systems**
- **Analogue inputs with high resolution and accuracy**
- **Easy usage and operation by means of WINDOWS program HCSTool**
  NEW: Now including oscilloscope function!
- **Extreme short cycle time for best dynamic behaviour (best in class)**

PROFIBUS® PROFINET®

Revision: R03

1 Applications and usage Bus Interfaces

Amplifier modules DMA-2 with Bus-Interfaces are generally used for:

Automation systems with Bus-Interfaces
- machine-building / industrial applications
- offshore and marine applications
- chemical industry
- general plant construction
- mobile applications

2 Features Bus-Interfaces

- Different bus systems available: PROFIBUS, PROFINET, ETHERNET/IP, CAN-OPEN
- Bus functionality approved by PNO for PROFIBUS
- Bus functionality approved by PNO for PROFINET
- Extended functionality and diagnosis possibilities
- DMA with bus-interfaces available as single or multi module packages with up to 5 DMA --> reduced bus loads and reduced cost
- Optimised telegram structure for multi module configurations
- Mulit module configurations freely configurable; all kinds of DMA can be combined in one set
- Flash-EPROM technology for easy software update via RS232 interface of the DMA module
- Fast and easy mounting, installation and exchange due to top-hat rail (DIN mounting rail) in accordance with EN50022
- Easy connection depending on Bus-Interface
- Customized adaptations available on request
- Outstanding reliability

3 Technical data Bus Interfaces

Feature	**Range, characteristics**
Supply voltage	Via DMA
Temperature ranges, EMC, Mounting/housing	Refer to page 3: Technical Data DMA
PROFIBUS-DP **NEW:** See certificate on page 13	- Approved by PNO - Supports PROFIBUS-DP Slave in accordance with IEC 61158 - Supports PROFIBUS DPV1 - Maximum 244 Byte in-/output data - Supports up to 12 Mbaud (autodetect) - Electrical isolated and opto-decoupled
Connection / Type of connector	RS485, Sub-D 9-pole female
Status signals	LED „Buserror“ (red)
Address selection	DIP switch 1- 8, each on/off
PROFINET **NEW:** See certificate on page 14	- Approved by PNO - Meets the standard IEC 61158 and IEC 61784 - LAN 10/100Base-T(X) - 2 x RJ-45 LAN (Daisy Chain) - Cycling data exchange RT and IRT with PROFINET IO-Controller - Sending and receiving of diagnostic and process alarms - I&M0...4-data available - Supporting of PROFINET naming (device name) and TCP/IP addressing - Fast Startup functionality supported - Shared Device supported - Media Redundancy Protocol support. - Electrical isolated interface
Connection / Type of connector	In/Out: 2 x RJ45 (integrated switch)
Status signals	Power (green), Error (red), Maint (yellow), Sync (yellow), Status (yellow)
Future use	DIP switch 1- 3, each on/off
ETHERNET I/P	- Maximum 32 Byte in-/output data - Supports 10 and 100MBit/s (autodetect) - IP address setting by means of parameter - Electrical isolated interface - Supports assembly instances 100 and 101 - Additional assembly instances 200, 201, 210, 211to directly communicate with multi fold modules
Connection / Type of connector	RJ45
Status signals	Status (red), Maint (yellow), Link/Act (yellow)
Address selection	DIP switch 1- 10, each on/off
CAN-OPEN	- Complete CAN-OPEN slave in accordance with standard CIA 301 / V4 - Supports all import Baud rates u.t. 2 Mbit - Node number and baud rate by means of vendor specific object - External bus termin.120 R requirred - One receive PDO - One transmit PDO - One SDO channel - Node guarding
Connection / Type of connector	Sub-D 9-pole male
Status signals	Status (red), Maint (yellow), Link/Act (yellow)
Address selection	DIP switch 1- 10, each on/off

4 Applications and usage DMA

Amplifier modules DMA-2 are generally used for:
proportional valves with feedback as
- directional / direct and pilot operated
- flow control valves
- pressure reducing valves
- pressure regulating valves
- cartridge valves
- servo valves (on request)
- valves without feedback used in applications with process value feedback (e.g. position, pressure, velocity, rpm, etc.)

5 Features DMA

- Fully digitized amplifier modul with high resolution and accuracy for analogue signal (12-Bit A/D-converter)
- Flexible system with outstanding reliability
- Use of modern 16 bit CPU with high power reserve
- Available for all kinds of valves and appications with and without closed loop functionality
- Optional available: special adapted versions for Hawe valves series PSL/PSV with/without feedback
- Flash-EPROM technology for easy software update or modifications from PC via RS232 interface
- Change of selected parameters “on-the-fly” without interference of function; monitioring of display values and 4-channel oscilloscope with **HCSTool** via PC (RS232 interface)
- Fast and easy mounting, installation and exchange due to top-hat rail (DIN mounting rail) in accordance with EN50022 and connectors with screw terminals or optional cage clamp technology system COMBICON

6 Technical data DMA

Feature	**Range, characteristics**
Supply voltage	Unom = 24 V (12 … 33V) DC, residual ripple < 10 % (max. 50 VA power draw) The modul can also be used on supply voltage of Unominel = 12 V (> 9.5 V)
Solenoid system selection	0.8 A, 1.1 A, 1.3 A, 1.6 A, 2.4 A, 2.7 A, 3.5 A and 0,15 A, 0,24 A, 0,5 A, 0,63 A, 0,8 A (optimised for Hawe solenoids)
Control voltage for digital inputs	(12) 24 V +/- 10 %, residual ripple < 10 %, current draw per input < 20 mA
Temperature ranges	Ambient: 0° C ... + 60° C (other on request) storage: - 20° C … + 80° C
Connection	16 pole (4 x 4); screw terminals for 0.2 - 2.5 mm² (AWG 24 -12); for detailed technical data refer to Phoenix Contact Combicon Product Catalog
Type of connector	Phoenix Combicon connectors with screw terminals, type: MSTBT 2,5/ 4-ST - special HCS version with printed on reference numbers. Or: terminals with cage clamp, type: FKCT 2,5/4-ST
EMC	In accordance with applicable standards (CE); Germanischer Lloyd VI-7-2 on request
Analogue set value and feedback value (input)	max. 2 differential signal inputs (12 bit resolution): 0 … +- 10 V, 0 … 20 mA, 4 … 20 mA (one command, one feedback); optional feedback: 5 V +- 3 V for Hawe hall sensor
Digital inputs	Depending on version: max. 5 digital inputs (Enable, S1.01 to S1.04), opto-coupled
Solenoid current (output)	2 output stages, each for up to max. 3.5 A (with over-energ. and quick de-energization);
Digital output	1 output opto-coupled, voltage level 0 V / 24 V, 10 mA (ERROR/Comparator)
Optional reference output	1 Reference output 10 V (max. 20 mA), short circuit protected; supply for hall sensor
Optional analogue output	1 Analogue output 0 ... +- 10 V (max. 20 mA), short circuit protected; for monitoring etc.
Interface	RS232, 6-pole female RJ45/6 connector
Status signals	3 status LED’s at front (Run/OK; Enable, $\overline{\text{Error}}$)
PWM frequency, cycle times	Approx. 22 kHz PWM frequency, cycle time max 0.220 msec
Mounting/housing	Mounting: top-hat rail (mounting rail) in accord. with EN50022 with inetgrated PE contact Housing configuration: ventilated (IP20) Material: PA 66 - FR (blue); flammability in accordance with UL94V0 Dimensions approx.: (w x h x d) 22,5 x 100 x 114 mm Bus single module version: dimensions approx.: (w x h x d) 45 x 100 x 114 mm Bus multi module version: dimensions approx.: (w x h x d) ((n+1)x22,5) x 100 x 114 mm; n = number of slaves (modules)

7 Example block diagrams hardware

Diagram for version: DMA-22-**01**-xxx-S0; Operation Mode: **01**

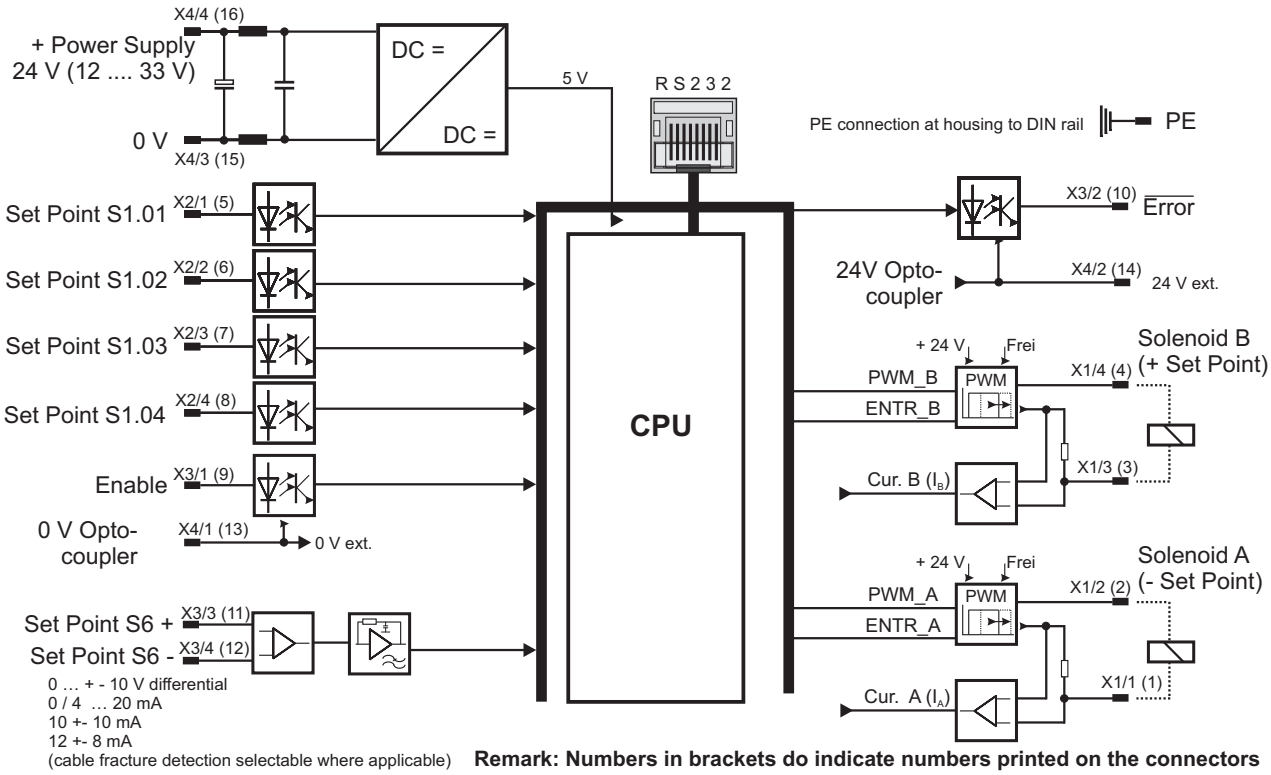

Remark: Numbers in brackets do indicate numbers printed on the connectors

Diagram for version: DMA-22-**02**-xxx-S0; Operation Mode: **02**

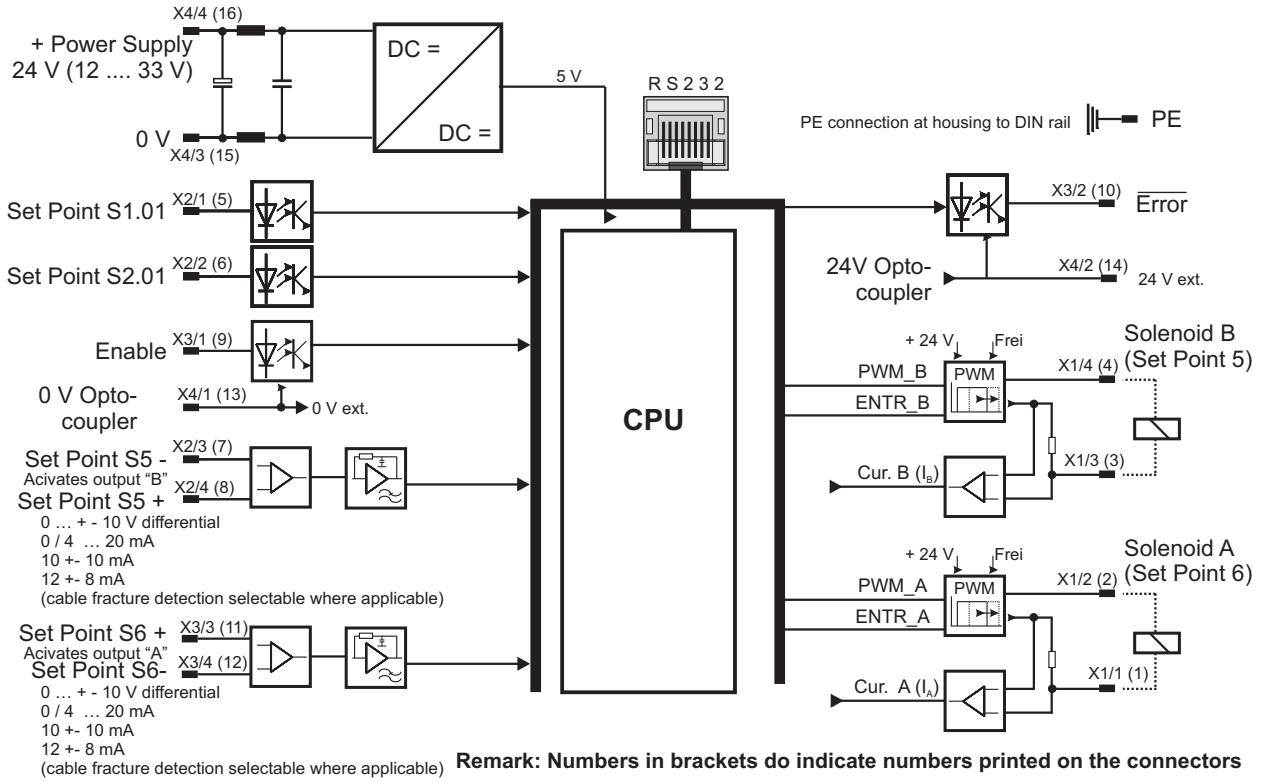

Remark: Numbers in brackets do indicate numbers printed on the connectors

Example diagram for version: DMA-22-**03**-xxx-S0; Operation Mode: **03**

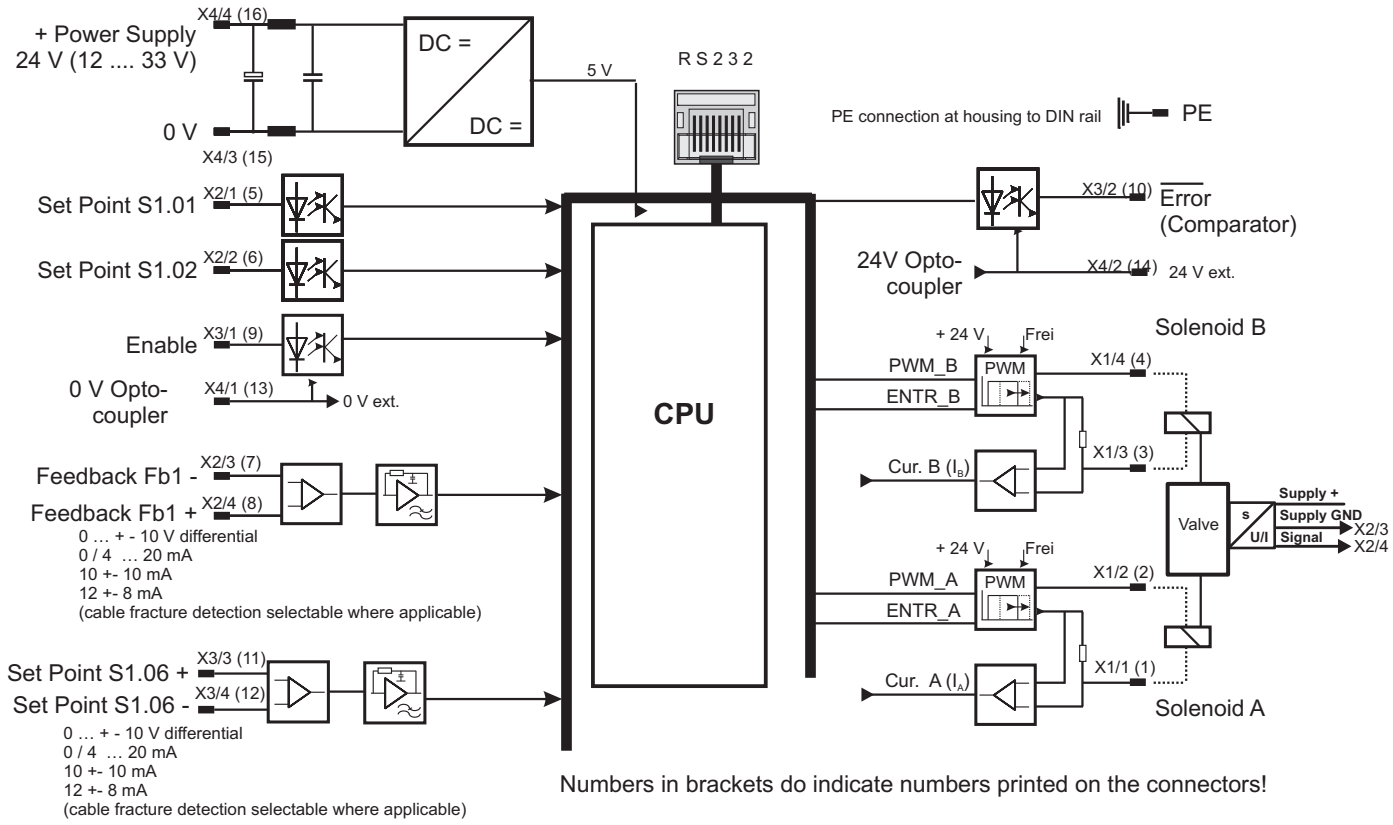

Example diagram for version: DMA-22-**05**-xxx-SHPR-ANAOut; Operation Mode: **05**

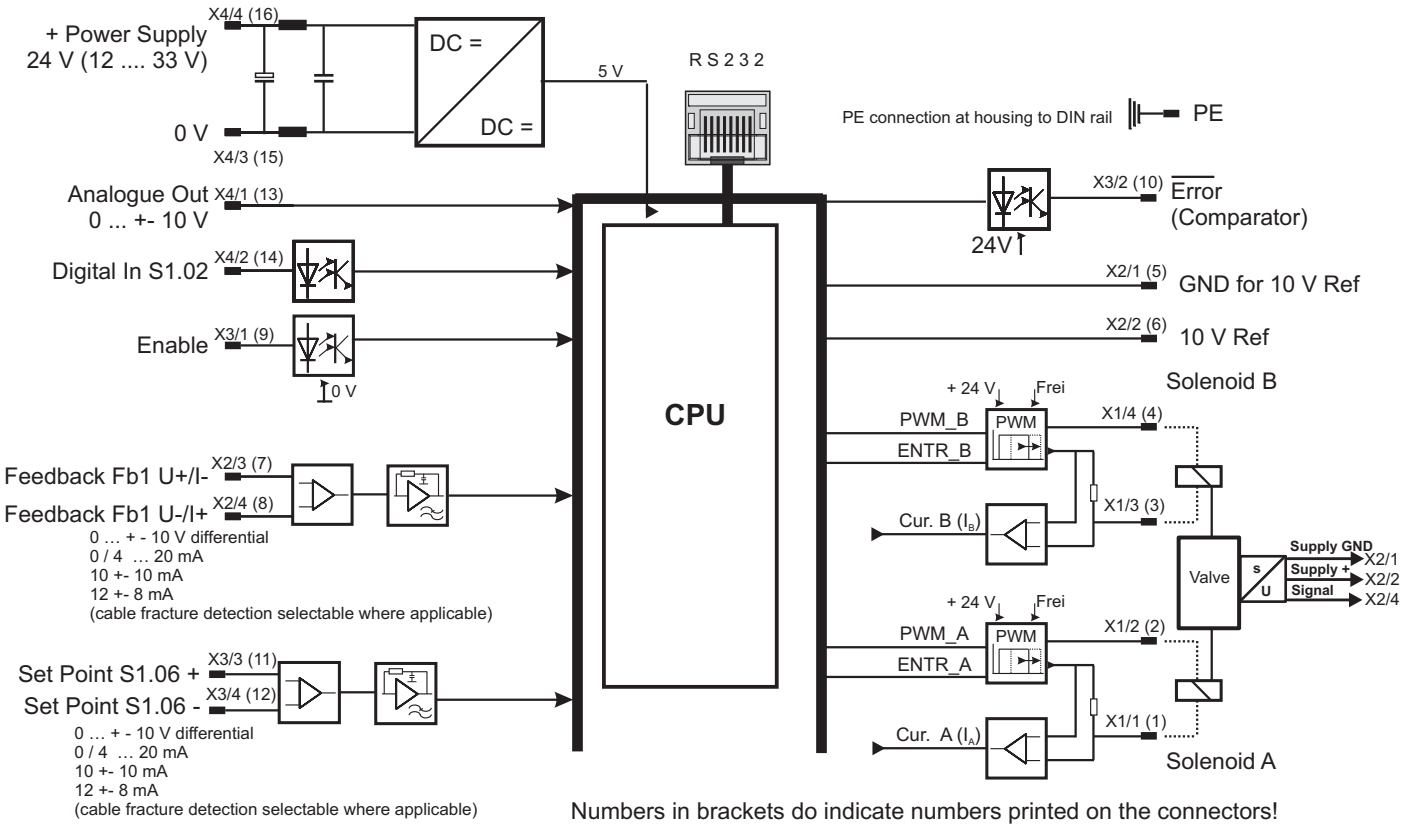

8 Example block diagram software functions

Version: DMA-22-**01**-xxx-S0 / Operation Mode: **01** ; 1 valve (open loop) with 2 solenoids

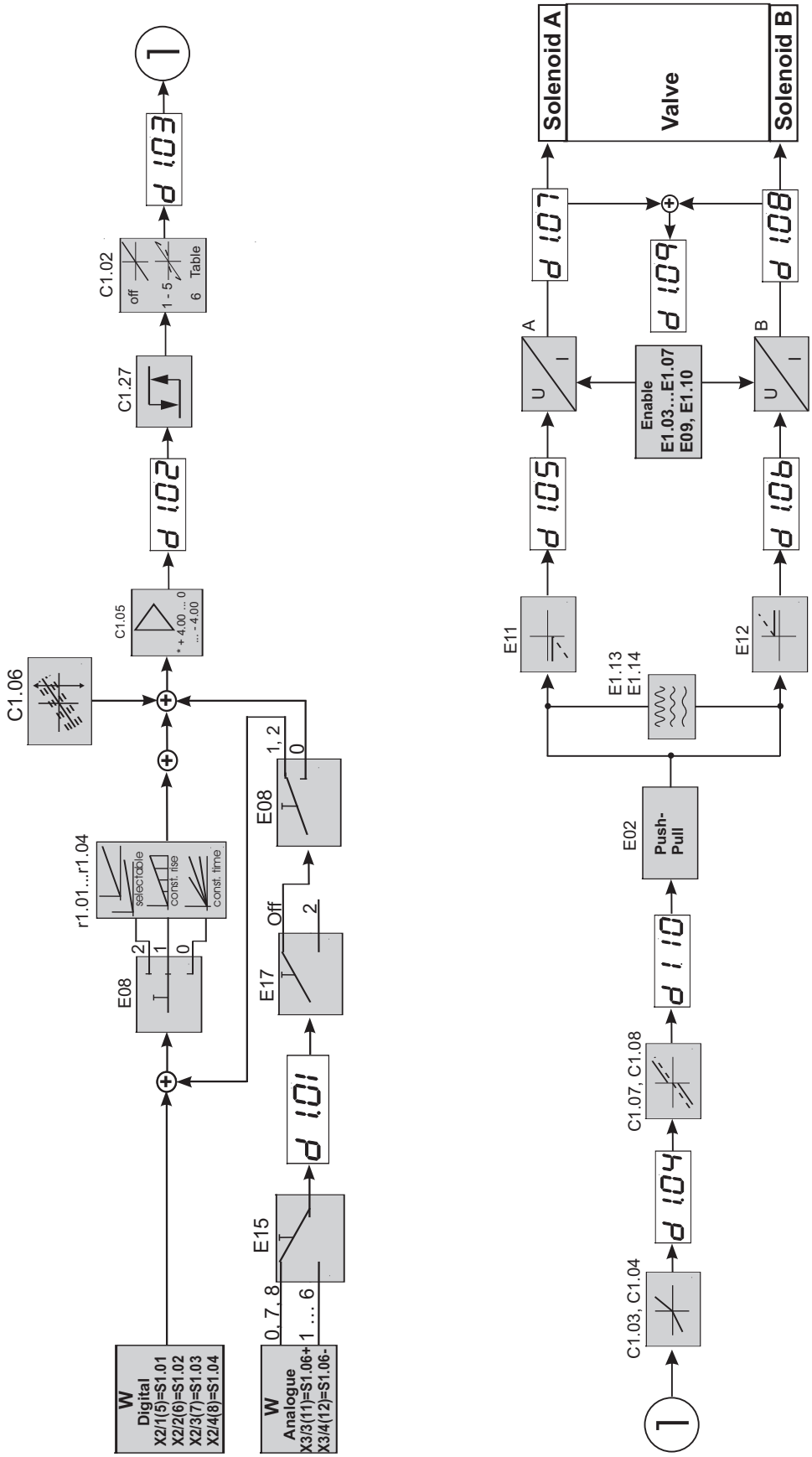

Example version: DMA-22-**03**-xxx-S0 / Operation Mode: **03** ; 1 valve with 2 solenoids and feedback

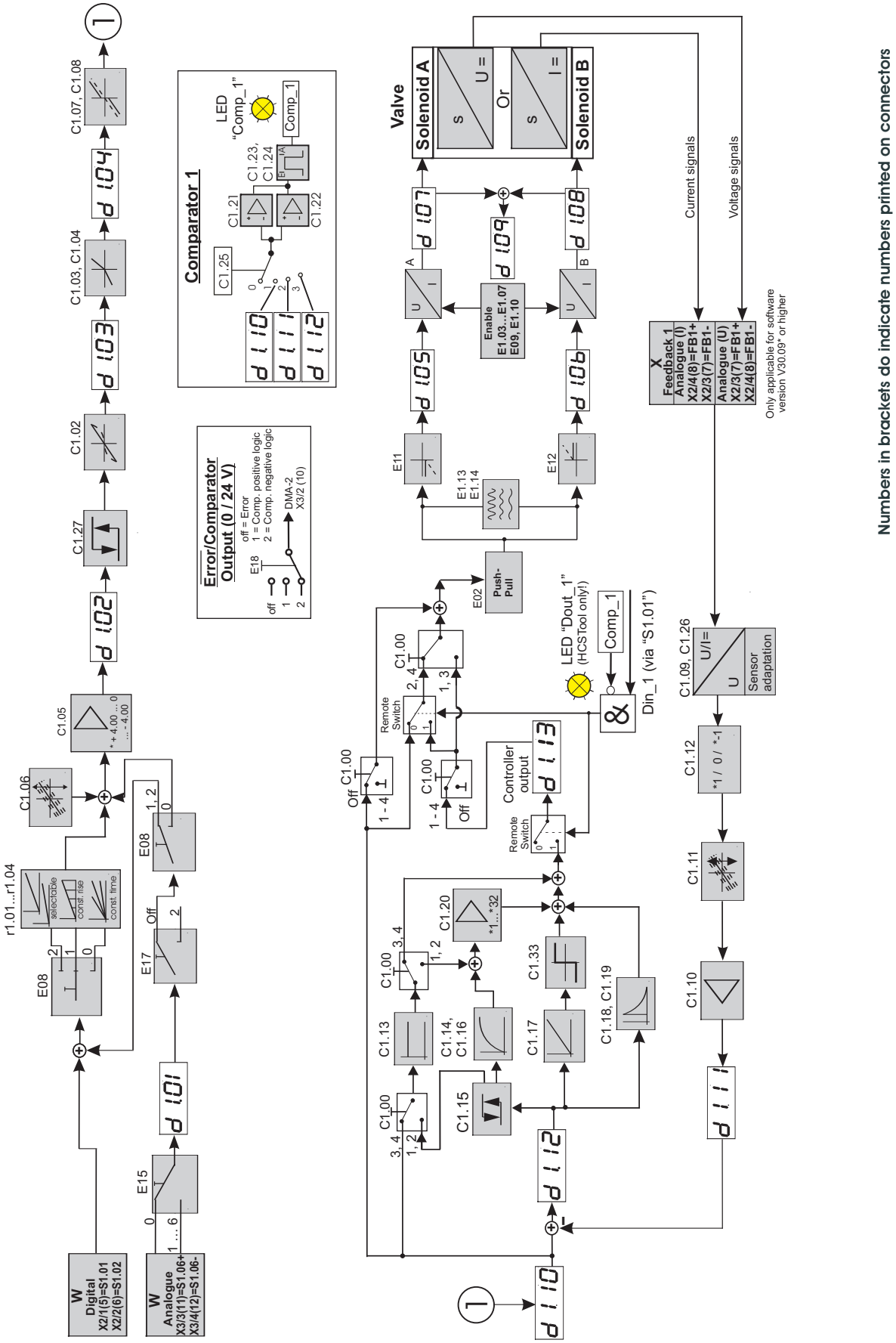

Version: DMA-22-**05**-xxx-SHPR-ANAOut; Software Versions V39.11x (DMA-X2)
Operation Mode: **05**, 1 valve with 2 solenoids and feedback; with „10 Vref Out“ and „Analogue Out“

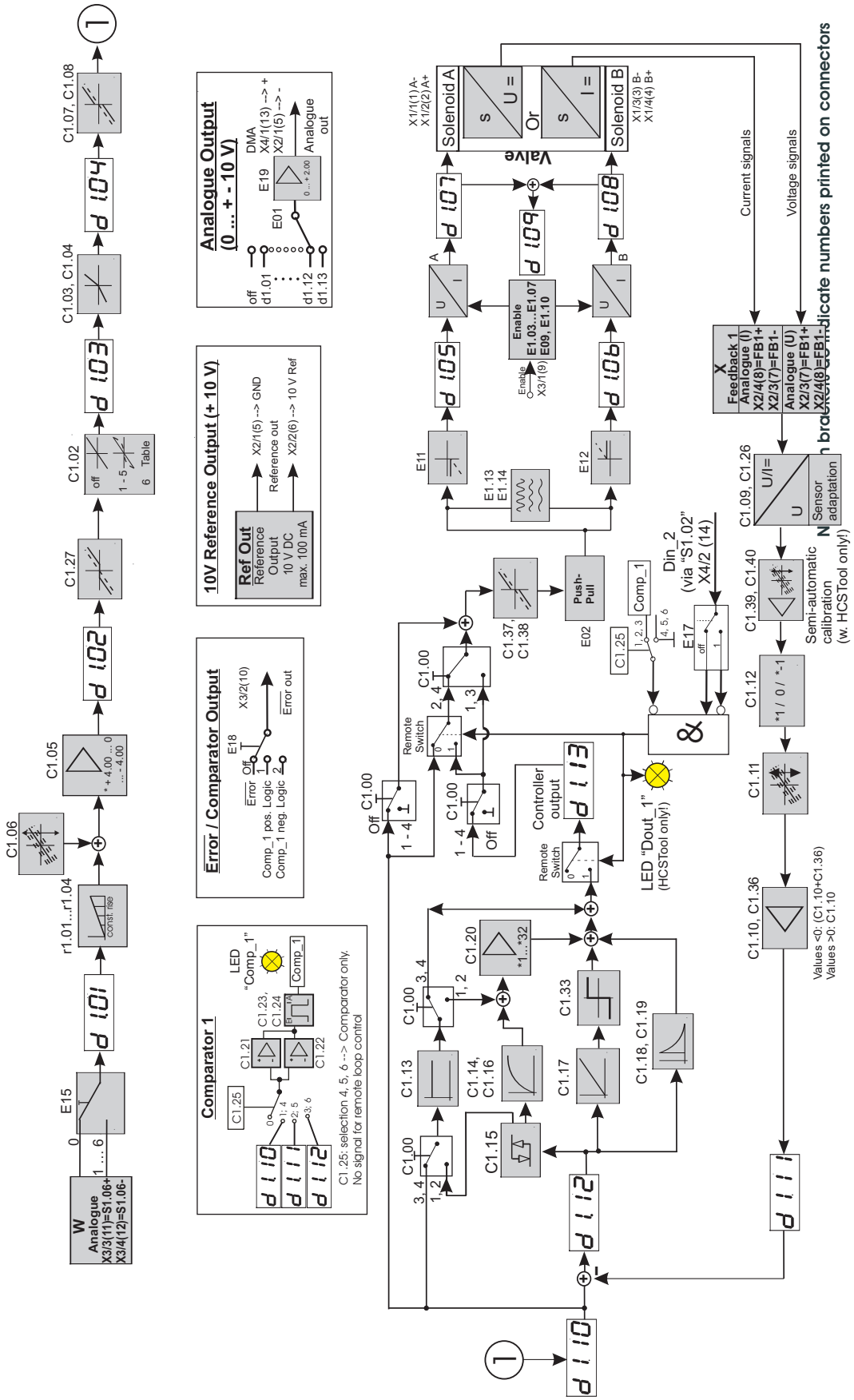

Numbers in brackets are indicate numbers printed on connectors

9 Example pictures of bus versions

e) PROFIBUS Examples single and multi-fold:

DMA-22-05-xxx-**PBDP**-x-SHPR:
example for PROFIBUS single module version

DMA-22-M3-050505-**PBDP**-MSTBU-Sxxxxx:
example for PROFIBUS 3-fold slave configuration

e) PROFINET Examples single and multi-fold:

DMA-22-05-xxx-**PN**-x-SHPR:
example for PROFINET single module version

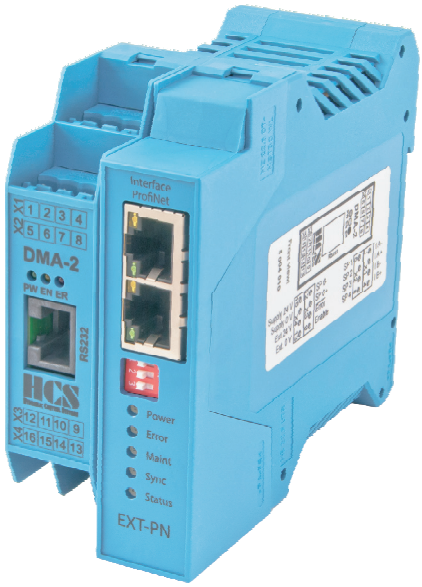

DMA-22-M3-050505-**PN**-MSTBU-Sxxxxx:
example for PROFINET 3-fold slave configuration

10 Accessories and Options

Name	Description
HCSTool	Software for parameterization, operation, monitoring, storage and documentation of adjustments. In English, French and German on CD (free download available). Please follow this link in order to download the most recent version of HCSTool: http://www.h-c-s-gmbh.de/download/
DMA-RS232-DS9F-RJ45	Interface cable for communication between PC and DMA-2 for RS232 interface. 1 x Sub-D 9-pole connector female, 1connector Western-Digital 6-pole, w. 2,5 m cable
USB-RS232-RJ45	As above but w. USB-adaptor. 1 x connector Western-Digital 6-pole, w. 2,5 or 10 m cable
EKB-04	EKB-04 Handheld keypad and display unit for parameter setting and copying
CU/DMA	Commissioning unit for DMA. For adaptation of one DMA. For Commissioning, serviceing, testing and trouble shooting etc. at machines, systems, for laboratories and for training
4MSTBU	Set of 4 connectors for DMA; Phoenix Combicon connectors with screw terminals, type: MSTBT 2,5/ 4-ST - special HCS version with printed on reference numbers
4FKCT	Set of 4 connectors for DMA; Phoenix Combicon connectors with cage clamp terminals, type: FKCT 2,5/4-ST
Coding for connectors (order separately)	Coding section (CR-MSTB), inserted into the recess in the header and keying profile (CP-MSTB), inserted into the slot on the plug (red); packages with 100 pcs each

Not to scale!

Commissioning Unit	Cable for comm. unit	Interface Cable	Interface Cable
	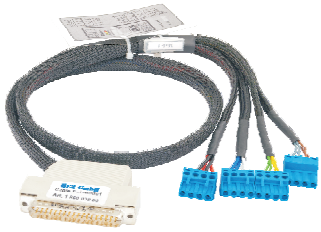		
HCSTool	EKB-4	Connectors 4MSTBU	Connectors 4FKCT
		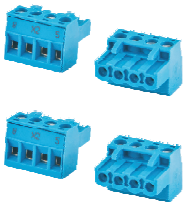	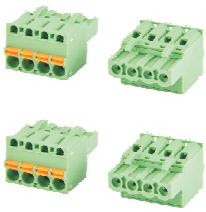

11 Ordering code single module bus versions (not all combinations available!)

D M A - 2 2 - 01 - 270 - (PBDP) - 4 M S T B U - S 0 - 5 C

Digital
Module
Amplifier

Module Version
22 = DMA-22

Operation Mode / Version
01 = 1 valve with 2 solenoids
02 = 2 valves with 1 solenoid each
03 = 1 valve w. 2 solen. w. 1 feedback
04 = 1 valve w. 2 solen. w. 1 process feedb.
05 = 1 Hawe valve with feedback (HPR)
06 = 1 valve w. 2 solen. w. 2 feedbacks
08 = 1 valve w. 2 solen. w. 2 process feedb.
10 = analogue output for process feedb.

Solenoid Systems
080 = 800 mA system, 110 = 1100 mA system
130 = 1300 mA system, 160 = 1600 mA system
240 = 2400 mA system, 270 = 2700 mA system
350 = 3500 mA system

Solenoid Systems
015 = 150 mA system
024 = 240 mA system
050 = 500 mA system
063 = 630 mA system
080 = 800 mA system

Bus Interface (for single module versions only!)
PBDP = PROFIBUS; PN = PROFINET
EIP = ETHERNET/IP; CO = CAN-OPEN

Connection type Phoenix Contact
0 = without mating connectors
4MSTBU = incl. set of connectors, (4 pcs); version: MSTBT 2,5/4-ST BU (blue)
4FKCT = incl. set of connectors, (4 pcs); version: FKCT 2,5/4-ST (green)

Special Options
S10 Vref = with 10 V reference output (e.g. for joy-stick)
SHAWE = special parameter set for HAWE valves with “twin” solenoid
SCC = Conformal Coating
SHPR = High Performance Range version (HAWE valves with feedback)
SANAOut = Analogue Output; SHPR-CC = Conformal Coating
Combinations possible! Other on request

For HPR onyl: valve version designation (specific parameter setting)
5 = Valve size (sizes: 3, 5, 7)
C = Valve with compensator

Important note: for ordering of mulit-module bus versions refer to ordering code on page 12

12 Ordering code, only multi module bus versions (not all combinations available!)

D M A - 2 2 - M 3 - 0 5 05 05 _ _ _ _ - P B D P - M S T B U - S x x x x x

Digital
Module
Amplifier

Module Version
22 = DMA-22

Number of slave modules
M2= 2 slave modules, M3 = 3 slave modules
M4 = 4 slave modules, M5 = 5 slave modules

Operation modes of slaves (modules)
01 = 1 valve with 2 solenoids
02 = 2 valves with 1 solenoid each
03 = 1 valve w. 2 solen. w. 1 feedback
04 = 1 valve w. 2 solen. w. 1 process feedb.
05 = 1 Hawe valve with feedback (HPR)
06 = 1 valve w. 2 solen. w. 2 feedbacks
08 = 1 valve w. 2 solen. w. 2 process feedb.
10 = analogue output for process feedb.
Define a maximum of up to 5 slaves (modules)

Bus Interface (for multi module versions only!)
PBDP = PROFIBUS; PN = PROFINET
EIP = ETHERNET/IP; CO = CAN-OPEN

Connection type Phoenix Contact
0 = without mating connectors
MSTBU = including all necessary sets of mating connectors, 4 pieces per slave module. Version: MSTBT 2,5/4-ST BU (blue)
FKCT =including all necessary sets of mating connectors, 4 pieces per slave module. Version: FKCT 2,5/4-ST (green)

Special part designation number: 5 digits
Important note:
If special part desigantion number is unknow please specify **each** module separately by using the according ordering code! See example below.

Important note: for ordering single bus versions refer to ordering code on page 11

Ordering code examples:

Single module versions:
Version with PROFIBUS is a closed loop version (for HPR valve size 5 with compensator) and has a 0.63 A coil including the set of mating connectors.

DMA-22-05-063-PBDP-4MSTBU-SHPR-5C

Multi module versions:
PROFIBUS Version with 3 slaves (DMA modules). Each of the 3 slaves (modules) is the same version and is a closed open loop configuration for a 2.7 A coil including the set of mating connectors. Please specify each of the modules.

DMA-22-M3-030304-PBDP-MSTBU-Sxxxxx containing
DMA-22-03-270-x-S0 (module in operation mode 3)
DMA-22-03-270-x-S0 (module in operation mode 3)
DMA-22-04-270-x-S0 (module in operation mode 4)

13 PROFIBUS Certificate

PROFIBUS • PROFINET

Certificate

PROFIBUS Nutzerorganisation e.V. grants to

HCS Hydraulic Control Systems GmbH
Neuffener Str. 29, 72636 Frickenhausen, Germany

the Certificate No: **Z01871** for the PROFIBUS device:

Model Name:	**DMA-22-VPC3**
Revision:	**V2.4; SW/FW: V0103a; HW: revision 02**
GSD:	**HCS0EA7.GSD, File Version: V2.4 17.01.2014**

This certificate confirms that the product has successfully passed the certification tests with the following scope:

☑	DP-V0	MS0, Sync, Freeze, Fail_Safe, Set_Slave_Add
☑	DP-V1	MS1, MS2, I&M
☑	Physical Layer	RS485

Test Report Number: **FZI0001**
Authorized Test Laboratory: **FZI Forschungszentrum Informatik, Karlsruhe, Germany**

The tests were executed in accordance with the following documents:
"Test Specifications for PROFIBUS DP Slaves, Version 3.09, September 2008".
This certificate is granted according to the document:
"Framework for testing and certification of PROFIBUS and PROFINET products".
For all products that are placed in circulation by July 14, 2017 the certificate is valid for life.

(Official in Charge)

Board of PROFIBUS Nutzerorganisation e. V.

(Karsten Schneider)

(K.-P. Lindner)

PROFIBUS®

14 PROFINET Certificate

PROFIBUS • PROFINET

Certificate

PROFIBUS Nutzerorganisation e.V. grants to

HCS Hydraulic Control Systems GmbH
Neuffener Str. 29, 72636 Frickenhausen, Germany

the Certificate No: **Z10981** for the PROFINET IO Device:

Model Name:	**DMA/DAC**
Revision:	**SW/FW: V0.1.0; HW: 2**
Identnumber:	**0x01F0; 0x0002**
GSD:	**GSDML-V2.3-HCS-DMA-20150204.xml**
DAP:	**DAP 3: Standard, MRP, 0x00000003**

This certificate confirms that the product has successfully passed the certification tests with the following scope:

☑	PNIO_Version	V2.2
☑	Conformance Class	C Optional features: MRP, IRT
☑	PNIO_Tester_Version	V2.2.4
☑	Tester	SIEMENS AG, Fürth, Germany, PN329-1, IRT078-1

This certificate is granted according to the document:
"Framework for testing and certification of PROFIBUS and PROFINET products".
For all products that are placed in circulation by February 26, 2018 the certificate is valid for life.

(Official in Charge)

Board of PROFIBUS Nutzerorganisation e. V.

(Karsten Schneider)

(K.-P. Lindner)

PROFINET®

Neuffener Strasse 29
D-72636 Frickenhausen
Tel: (+49) 7025 - 911 007
Fax: (+49) 7025 - 911 008
Email: info@h-c-s-gmbh.de
www.h-c-s-gmbh.de

EC Declaration of Conformity in accordance with EMC Directive 2004/108/EG

HCS Hydraulic Control Systems GmbH
Neuffener Str. 29
D-72636 Frickenhausen

hereby declares that the product described as follows complies in terms of its design, as well as in the version placed in the stream of commerce by us, with the relevant requirements of the directive. This declaration is void in the event of any changes to the product without our written agreement.

Product:	Digital Amplifier and Controller Module with PROFIBUS-Interface
Intended use:	Automation systems (industrial applications)
Model:	DMA-22-Mx-x-PBDP-x and DMA-22-x-PBDP-x
Rated voltage:	24 V DC; SELV
Rated power:	max. 100 W
Protection class:	III
Protection degree:	IP00 (IP20 on request)
Relevant EC Directive:	EMC Directive 2004/108/EG
Applicable EU Standards:	
Emissions:	EN 61000-6-4:2007 + A:2011
Immunity:	EN 61000-6-2:2005

Date/manufacturer's signature

17.01.2015
Details of signatory: Dipl.-Ing. (FH) Peter Deuschle (General Manager)

Neuffener Strasse 29
D-72636 Frickenhausen
Tel: (+49) 7025 - 911 007
Fax: (+49) 7025 - 911 008
Email: info@h-c-s-gmbh.de
www.h-c-s-gmbh.de

EC Declaration of Conformity in accordance with EMC Directive 2004/108/EG

HCS Hydraulic Control Systems GmbH
Neuffener Str. 29
D-72636 Frickenhausen

hereby declares that the product described as follows complies in terms of its design, as well as in the version placed in the stream of commerce by us, with the relevant requirements of the directive. This declaration is void in the event of any changes to the product without our written agreement.

Product:	Digital Amplifier and Controller Module with PROFINTET-Interface
Intended use:	Automation systems (industrial applications)
Model:	DMA-22-Mx-x-PN-x and DMA-22-x-PN-x
Rated voltage:	24 V DC; SELV
Rated power:	max. 100 W
Protection class:	III
Protection degree:	IP00 (IP20 on request)
Relevant EC Directive:	EMC Directive 2004/108/EG
Applicable EU Standards:	
Emissions:	EN 61000-6-4:2007 + A:2011
Immunity:	EN 61000-6-2:2005

Date/manufacturer's signature

17.01.2015
Details of signatory: Dipl.-Ing. (FH) Peter Deuschle (General Manager)

Hydraulic Control Systems GmbH Geschäftsführer / General Manager: Dipl.-Ing. (FH) Peter Deuschle + Dipl.-Ing. (FH) Volker Bremauer
Sitz / Head Quarter: D-72636 Frickenhausen Amstgericht / Register Court: AG Stuttgart HRB 224899

16 Our partners and distributors

Europe

NORWAY, ALL NORDIC COUNTRIES

Servi Hydranor AS
Rasmus Solbergs vei 1
N-1400 Ski
Norway
Tel.: (+47) 64 - 979 797
Fax: (+47) 64 - 979 899
Borre.Kleven@servi.no
www.servi.no

SWEDEN I (South-West)

PMC Hydraulics AB
Askims Verkstadsväg 15
Box 1013
SE-43621 Askim
Sweden
Tel.: (+46) 31 - 28 98 40
Fax: (+46) 31 - 28 64 01
Per-Anders.Kallden@pmchydraulics.se
www.pmchydraulics.se

SWEDEN II (North-East)

Norrlands Hydraulik
Stenhuggargatan 4
SE-913 35 Holmsund
Sweden
Tel.: (+46) 70 - 646 57 57
kurt.w@norrhyd.se
www.norrlandshydraulik.se

SWITZERLAND

GRIBI Hydraulics AG
Lättenstr. 33
CH-8952 Schlieren
Switzerland
Tel.: (+41) 1 733 - 40 50
Fax: (+41) 1 730 - 58 05
info@gribi-hydraulics.ch
www.gribi-hydraulics.ch

GREAT BRITAIN

Voith Turbo Ltd.
6 Beddington Farm Road
Croydon, Surrey
England CRO 4XB
Tel: (+44)208 667 0333
Fax: (+44) 208 667 0403
nick.moody@voith.com
www.uk.voithturbo.com

FRANCE

SEFYDRO
Pôle République 1
23, Rue des Entrepreneurs
BP 1086
F-86060 POITIERS
Tel. : (+33) 549 607 016
Fax. : (+33) 549 602 480
bureau.etudes@sefydro.fr
www.sefydro.fr

ITALY

BIMAL TESTING MACHINES S.R.L.
Automation & Software Department
Zona Industriale - Via A. Monni, 18
I-06135 Ponte Valleceppi (Perugia)
Italy
Tel.: (+39) 075 - 592 171
Fax: (+39) 075 - 592 1740
automazioni@bimal.com
a.paolucci@bimal.com
www.bimal.com

SPAIN I

HRE HIDRAULIC S.L.
C / Ibaitarte, 21
E-20870 Elgoibar
Spain
Tel.: (+34) 943 - 742 130
Fax: (+34) 943 - 742 708
hre-hidraulic@hre.es
www.hre.es

SPAIN II

GLUAL HIDRÀULICA, S.A.
Landeta Hiribidea, 11
E-20730 Azpeitia (Gipuzkoa)
Spain
Tel.: (+34) 943 157 015
Fax: (+34) 943 157 404
j.valverde@glual.es
www.glual.com

16 Our partners and distributors

ROW I

USA I

SERVI FLUID POWER INC.
22240 Merchants Way | Suite 100
Katy, TX 77449, USA
Tel.: (+1) 281 - 347 8080
info@servi-inc.com
www.servi-inc.com

USA II

NC SERVO TECHNOLGY INC.
38422 Webb Drive
Westland, MI 48185-1974, USA
Tel.: 1-800 327 - 3786
Tel.: (001) 734 - 326 6666
Fax: (001) 734 - 326 6669
sales@ncservo.com
www.ncservo.com

USA III

Hawe Hydraulik - East
9009-K Perimeter Woods Drive
Charlotte, NC 28216, USA
Tel: (+1) 704 509 1599
Fax: (+1) 704 509 6302
sales@hawehydraulics.com
www.hawe.com

USA IV

Hawe Hydraulik - Central
10920 W. Sam Houston Pkwy N.
Suite 700
Houston, TX 77064
Tel: (+1) 713 - 300 3260
Fax: (+1) 281 - 970 6692
sales@hawehydraulics.com
Also:
Cell: (+1) 832 - 797 4608
m.paxton@hawehydraulics.com
www.hawe.com

USA V

Hawe Hydraulik - West
912990 S.E. HWY 212
Clackamas, OR 97015, USA
Tel: (+1) 503 222 3295
Fax: (+1) 503 225 5976
sales@hawehydraulics.com
www.hawe.com

CANADA and USA VI

HYDRA-FAB FLUID POWER INC.
3585 Laird Road Unit 5
Mississauga, Ontario L5L 5Z8
Canada
Tel.: (+1) 905 - 569 1819
Fax: (+1) 905 - 569 7801
rgores@hydrafab.com
www.hydrafab.com

BRASIL, SOUTH AMERICA

Voith Turbo Ltda
Av. Fernando Stecca, 575
Alto da Boa Vista
BR - 18087 - 450 Sorocaba / SP
Tel.: (+55) 15 228 1114
Fax: (+55) 15 228 1115
friedrich.guther@voith.com
www.hl-hydraulic.com

16 Our partners and distributors

ROW II

ASIA

KC Kim Consulting GmbH
Support in German, English,
Chinese and Korean
Industrial Engineering Im- und Export
Lilienthalstr. 3
D-30916 Isernhagen
Tel: +49 (0)511-898809-17
Fax: +49 (0)511-898809-29
c.kim@kc-co.com
info@kc-co.com
www.kc-co.com

AUSTRALIA I (Brisbane)

Hydraulic Specialists Australia Pty Ltd
21 Production Street, Wacol
Queensland,
Australia, 4076
Tel: +61 (07) 3879 4400
Fax: +61 (07) 3879 4333
brisbane@hsaus.com.au
lharley@qldhsaus.com.au
www.hsaus.com.au

AUSTRALIA II (Melbourne)

Hydraulic Specialists Australia Pty Ltd
9 National Drive , Hallam
Victoria
Australia, 3803
Tel: +61 (03) 9796 5433
Fax: +61 (03) 9796 4955
melbourne@hsaus.com.au
lharley@qldhsaus.com.au
www.hsaus.com.au

INDIA

Greentech Engineers Australia
Mr. Vish Karegowda
Mount Waverley, Victoria
Australia, 3149
Tel : +61(03) 9803 5941
contact@greentechea.com.au
www.greentechea.com.au
Skype : grnhorizon